VHF HORIZONS

FEBRUARY 1963
40 CENTS

nuvistor
THE NEW LOOK IN ELECTRON TUBES
DEVELOPMENTAL TYPES
RCA

Really Low Noise ... page 4

Amateur Radio Above 50 Megacycles

A 4-track 2-channel Recorder expressly designed to become an integral part of a complete Amateur Station. 4-track stereo and monaural Record/Play...

AMPLIFIERS — Two: Channel I and Channel II, Output 3 watts each channel at 4 ohms.

EACH CHANNEL

INPUTS:

- ★ Mike: Channel I — Hi/Lo impedance
  Channel II — Hi impedance only
- ★ Preamp (Line)
- ★ Lo impedance from Receiver (Channel I or II, not both)

OUTPUTS:

- ★ Mike Preamp
- ★ Preamp (Line)
- ★ Monitor Speaker Jack (4 ohm)

CONTROLS:

- ★ Gain
- ★ Tone (Equalizing)
- ★ VU Meter

COMMON CONTROLS:

- ★ Lo impedance from Receiver for Recording Channel I or II
- ★ Hi/Lo Mike Impedance Selector (Channel I only)
- ★ Record Preset for Record from Receiver
- ★ Record Indicator ★ Motor Indicator
- ★ Motor Switch ★ Power Switch

model AR-300 TAPE RECORDER for the AMATEUR

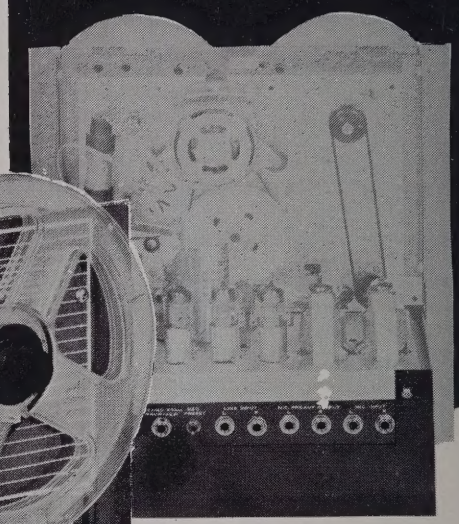

Rheem

AMATEUR NET:
$259.50

Reel Size: 7″ maximum
Wow & Flutter: 0.2% or better
Bias Frequency: 95 KC
Response: 70 to 15,000 cycles ± 3 db.
Tape Speeds: 7½ or 3¾ IPS
Signal/Noise: 45 db.
Power: 110-125 Volts, 60 cycles, 80 watts
Weight: 27 pounds

WRITE DEPT. VHF-2

RHEEM CALIFONE CORPORATION ★ 5922 BOWCROFT ST. LOS ANGELES 16, CALIF.

X-rays Preorient Raw Quartz for Making PR CRYSTALS...Orientation Verified By X-raying Blanks Coming from Cutter

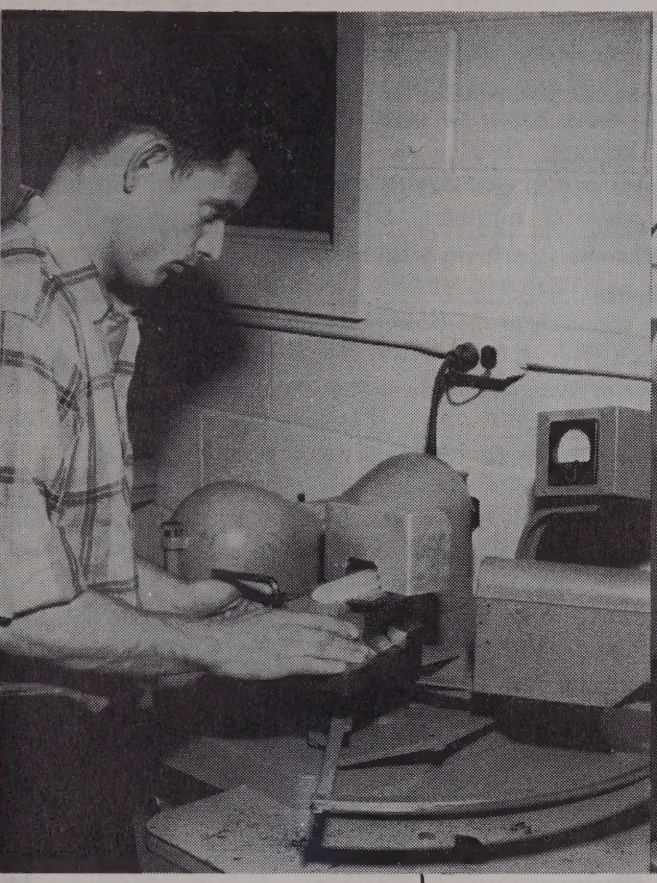

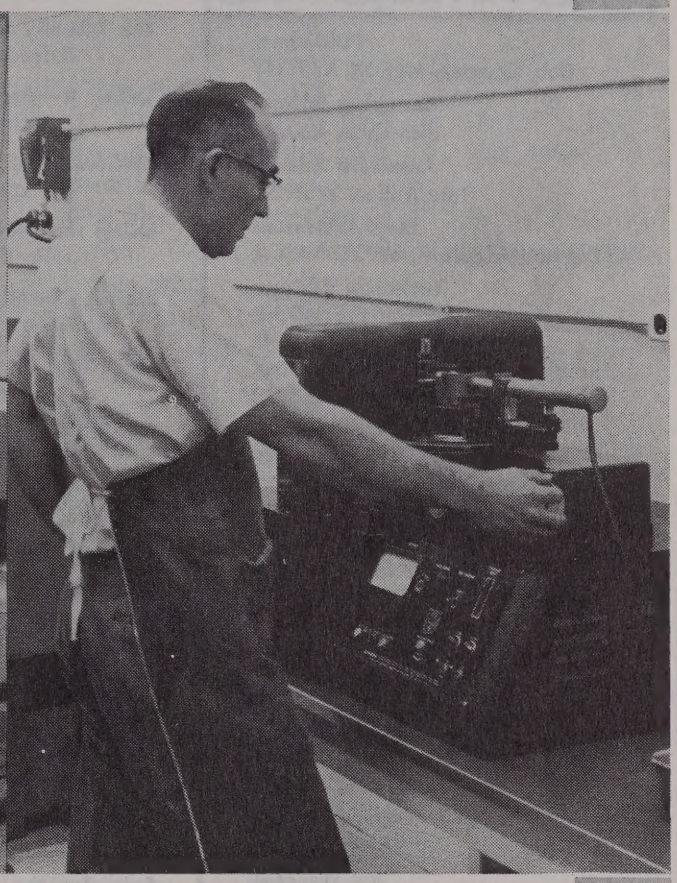

AMATEUR TYPES

FUNDAMENTAL, PR TYPE Z-2—Frequency Ranges in Kcs.: 3,500 to 4,000 (80-M); 7,000 to 7,425 (40M); 8,000 to 8,222 (2M); 8,334 to 9,000 (6M) ± 500 Cycles . . . $2.95 Net

(All Z-2 Crystals calibrated with a load capacity of 32 mmfd.)

Third Overtone, PR Type Z-9A, 24,000 to 24,666 and 25,000 to 27,000 Kc., ± 3 Kc. . . $3.95 Net

6 Meters, Fifth Overtone, PR Type Z-9A, 50 to 54 Mc., ± 15 Kc..... $4.95 Net

Citizens Band, PR Type Z-9R .005% ..... $2.95 Net

MINIMUM ORDER $10.00

ORDER FROM YOUR JOBBER

Rigid inspections are the rule at every stage of production . . . to make PR Crystals the *finest that money can buy.*

Photograph at left shows raw crystal being preoriented. Each bar of crystal must be placed in exactly the right position, as shown by X-ray. The crystal is then locked in place, and the entire jig with crystal is transferred to an automatic cutting machine. Photograph at right shows cut crystals being rechecked by X-ray, to verify precision of orientation.

PR CRYSTALS have been the Standard of Quality since 1934. Get them from your jobber.

PR Crystals

Since 1934

USE PR AND KNOW WHERE YOU ARE

PETERSEN RADIO COMPANY, INC.
COUNCIL BLUFFS, U.S.A.

VOLUME 2 — NUMBER 2
FEBRUARY, 1963

VHF HORIZONS

Publisher:
Bob Cooper, K6EDX W5KHT
Managing Editor:
Jim Kyle, K5JKX
Associate Editor:
Russ Miller, W5HCX
Staff Historian:
A. David Middelton, W7ZC/W5CA
Technical Editors:
Northern—Len Garrett, W7JIP
Ernie Manley, W7LHL
Southern—Paul Wilson, W4HHK
Western—Bob Grimm, K6RNQ
Research Consultants:
Jackson L. Cox, W0KMV
Ansel Gridley, W4GJO
Bob Richardson, W4UCH
Karl Blakeley, W5EBH
Leroy May, W5AJG
Ernie Brown, W5FYZ
Joe Harwell, W5JWL
Phil Patterson, W5SFW
John White, W5UKQ
Gib de la Laing, W6BJI
Alan Margot, W6FZA
John Chambers, W6NLZ
Norm Hawkins, VE6HO
Assistant Editor:
J. J. Jones
Art Director:
Jean Schafer
Business Manager:
P. T. Pogue
Circulation Manager:
Deborah Carter
Circulation Assistant:
UNIVAC
Schematic Design:
Diane Mashore
Advertising, Sales Office
1025 N. Broadway
Oklahoma City 2, Okla.
Telephone 405—CE 2-1108
Call Collect for Advertising Data
Circulation Office
P. O. Box 1557
Oklahoma City 1, Okla.

OUR COVER

The odd-looking object on our cover this month is the top of the box in which RCA ships developmental-type Nuvistors; a few months ago it arrived in our office with several 8058's inside. We promptly put them to work.

CONTENTS

Features

How to Have Really Low Noise on 432 Mc K5JKX 4
The third 8058 converter this month—but the simplest of the three

6 Meter Meteor ..... Staff 8
DSB for 50 Mc—(Mostly) Factory Wired

The AM-33/Art for Six and Two K5ZND 12
Surplus conversion; shouldn't take over an hour

Utility 8—Megacycle Oscillator-Buffer W4HHK 14
Building block circuit for those who want real stability

69-Cent Heat Chimneys W6MMU 15
The quick way to cool 4-125A's and the like

Using the R-449 ..... W6NLZ 16
John Chambers performs evaluation of new surplus

Noise Cancellation K5MBV 18
A new approach to the power-leak, etc., problem

QSO Showboat W5CA/W7ZC 19
Part one of Two; a glimpse at the days behind us

Making the UPX-4 Work W5HTZ 22
Putting a kilowatt on 1296 with more surplus

Departments

Scatter K5JKX 3
About type faces, cancellations, and cards

Construction Box 26
Parasitic suppressors, g.d.o hints, 2C39 sockets, etc.

Vital Happenings and Facts 29
Operating and DX news

VHF Showcase 34
The month's latest in goodies and such

Lab Reports 36
W5HCX tells how he likes the 5-element Hornet beam for 2

Scanning the Literature 38
Capsule comments on current magazines and new books

Classified Advertisements 39
Wanna buy or sell something?

D. C. Pulses 40
Late word from Washington

VHF HORIZONS (title registered U.S. Post Office) entered as Third Class postage material in Oklahoma City, Oklahoma. All copyright and editorial rights reserved by Horizons Publications, 1963.

The entire contents of this publication are copyrighted by Horizons Publications. No article in this magazine may be reproduced in whole or in part without the written permission of the publisher.

ADVERTISING—VHF Horizons magazine accepts commercial display advertising from bonafide manufacturers, and distributors of electronic equipment and associated apparatus. Advertising rate card and coverage data available upon proper request.

CIRCULATION—VHF Horizons magazine is circulated through the mails and sold over the counter at leading electronic parts wholesale houses throughout the United States and Canada. Approximately 25,000 active amateur radio operators have VHF/UHF interests, and this is their publication!

SUBSCRIPTION—Subscription rate in the United States, $4.00 per year, $7.00 two years. Airmail subscription available at $7.00 per year. Subscription in Canada, Central America $5.00 per year. Subscription elsewhere $5.50 per year.

SCATTER

. . . de K5JKX

ABOUT TYPE AND ITS LOOKS

Those of you who have suffered with us from the start know that we've had more than our share of typos, etc. Well, we've changed printers and the troubles should be about over. Why? The foreman at the new printer is K5SAM, that's why!

At the same time, we're considering another change — to a different-looking type than we have used in the past. Only trouble is we can't make up our minds which is best, so we want your help. This issue contains the four front runners. You tell us (via DRP or postcard) which you like best. The type on this page is **Garamond**; that on pages 4, 5, 6, 7, 22, 23, 24, 26, and 27 is **Estienne**; that on 8, 9, 10, 12, 29, 30, 31, 32, and 33 is **Century**; and pages 14 through 21 are in **Bodoni.** Which do you like?

ABOUT CANCELLATIONS AND CARDS

Several times a week, letters cross my desk which start out: "Dear VHF Gang — I like your magazine so well that I am cancelling my subscriptions to all other ham publications . . ."

Naturally, this makes me more than a little bit happy. But it also makes me a bit **unhappy** as well at the thought that the writers may mean they are quitting the ARRL! (At least, that's what cancelling QST implies to me.)

We've said it before and we'll say it again from time to time: the League is not perfect. But on the other hand, who is? I am reminded of an ancient and somewhat apocryphical story about a cowpoke back in the wild days of the West:

Seems he was busily engaged in a poker game when his buddy sidled up to him and whispered in his ear, "Don't you know that game is crooked?"

To which our hero replied, after calling the dealer and raising five, "Sure—but it's the only game in town!"

This is **not** meant to imply in any way that we feel the League is crooked. It's not. We know many of the HQ gang and several directors personally. A finer bunch of fellows we've never met. They're trying hard, and doing their best, to represent ham radio. **All** ham radio, not any one minority segment.

But the fact remains it is the only game in town. What's more, there's no room for another one.

The major function of the ARRL is to serve as a unified spokesman for ham radio before the world, and especially before governmental groups which regulate radio.

Two such organizations competing with each other could never hope to succeed. For success in such an effort, we hams **must** speak with a single voice. And the League **is** that voice. Like it or not, those are the facts of life.

If you don't like something the League happens to be doing, then the best thing for you to do it to sound off about it in a constructive way. Tell your ARRL director about it. Tell him what you don't like and why. If enough directors hear the same complaints often enough, things will change.

If you've ever studied the workings of the League, you know it is run on a democratic basis. The whole cornerstone of this country is the idea that the majority of the public, if they are well-informed, will invariably make the **right** decision. That's just as true in ham radio as it is in national politics.

So if you don't like the ARRL, but **do** like ham radio, why then you'd better join the League and work like a beaver to get enough guys to agree with you to change what you think is wrong. If you're right, you'll win out, never fear.

And if you can't bring yourself to do that, then the next best thing to do is just to keep quiet and let those of us who **are** willing to work for what we believe in do what we can.

One thing for sure — attempts to undercut or discredit the League do nothing but hurt those who try it. The ARRL has been

(Turn to page 28)

How to Have Really Low Noise on 432 Mc

By JIM KYLE, K5JKX
Managing Editor: VHF

The UHF operator who wants really low noise receivers for 432 Mc and higher bands has (until recently) faced a complex problem.

In essence, it's this: readily available front-end tubes just don't have the low-noise characteristics needed. Those that do, for the most part, have other failings that prevent their use above about 300 Mc.

For instance, the 7788 tends to fold up and die because of cathode lead inductance just above 300 Mc. The 6CW4/6DS4 series of Nuvistors behave about the same.

And the choice, for 432, has been between three approaches: the 6AM4 UHF TV triode, the 416B, and a paramp. Each has had its disadvantages.

The 6AM4, for instance, can't give you a noise figure much better than 10 db. The 416B is capable of better performance but is hard to obtain and is also short-lived. The paramp gives outstanding performance but is somewhat tricky to adjust and to keep in adjustment.

However, the situation has now changed for the better. RCA has come up with a new Nuvistor — the type 8058 — which overcomes the failings of the earlier models for UHF use and which allows a simple tube-type 432 converter to compete with paramps.

The converter described here uses two of these new tubes in an adaptation of the rig described in the current ARRL handbook. The result is outstanding on-the-air performance, with noise characteristics more like what you would expect on 50 Mc than on 432!

It was born during a discussion with Bill Ashby, K2TKN, during the 1962 Syracuse Roundup. Bill mentioned that he had built a converter using two 8058's feeding a crystal mixer which he said "performed like a paramp." That was all it took.

As soon as a couple of 8058's could be located (they're so new nobody had them but RCA; we understand the cost is about $13 each but they're well worth it), this rig was put together.

The oscillator gave us some trouble, but after the shorted section of coax was located and removed everything perked nicely. On-the-air 432 Mc signals are scarce around this region, so a signal generator was used to compare the 8058 converter with a fully aligned and well-operating Centimeg unit.

The Centimeg cranked about 10 to 15 db of noise into the *if* receiver; the test signal from the generator produced a 60-over-9 signal. Since the noise made the S-meter read between 7 and 8, this means the signal itself was about 69 "db" over the noise.

The 8058 unit put no noticeable extra noise in (just enough to tell it was working). The test signal read about 20-over-9. This meant the signal was some 74 "db" over the noise — a clear 5 db improvement *provided* that the "db" of the S-meter used for the measurement are true db. Probably they are not.

According to RCA, this tube shows only 5 db noise figure at 1,000 megacycles in a test circuit; at 500 Mc this drops off quite a bit.

After the measurements, on-the-air tests confirmed the improvement in performance. It should do the same for you.

CONSTRUCTION

If you're used to building UHF equipment, this converter will be duck soup for you. No parts layout was included with the article because nothing seems to be quite that critical; the photos show general placement of parts and, if you keep signal leads short, this should be enough.

The converter consists of two grounded-grid amplifiers using the 8058 in each, a triode mixer using a 6DS4, and an oscillator-multiplier chain using a single 12AT7 and one semiconductor diode.

Signal feeds directly from the input jack (through a 50-pF disc ceramic capacitor) to the cathode of the first 8058. The plate circuit of this stage (consisting of a half turn of No. 12 bus wire 5/8 inch in diameter, tuned with a 4-pF piston trimmer) is tapped 1/3 of the way from the cold end. This tap feeds the second 8058 in the same way; the second stage is a Chinese copy of the first.

Signal from the second stage feeds to the mixer in the same way; however, the mixer cathode returns through the final multiplier tank rather than through an RF choke.

The oscillator is a conventional overtone circuit operating at 47.222 Mc. This is then tripled to 141.666 Mc in the second half of the 12AT7. A link over the 141 Mc tank coil connects to the 1N82 diode multiplier and taps onto the 425-Mc final multiplier tank. I actually used a special computer diode I had on hand instead of the 1N82, but almost any diode will work (even a 1N34 — I tried it) so try all you have and use the one which gives you the best output.

The crystal I used came from Texas Crystals and was actually calibrated down to the last cycle. Naturally, this calibration holds true only in one specific circuit and you will probably find yourself several

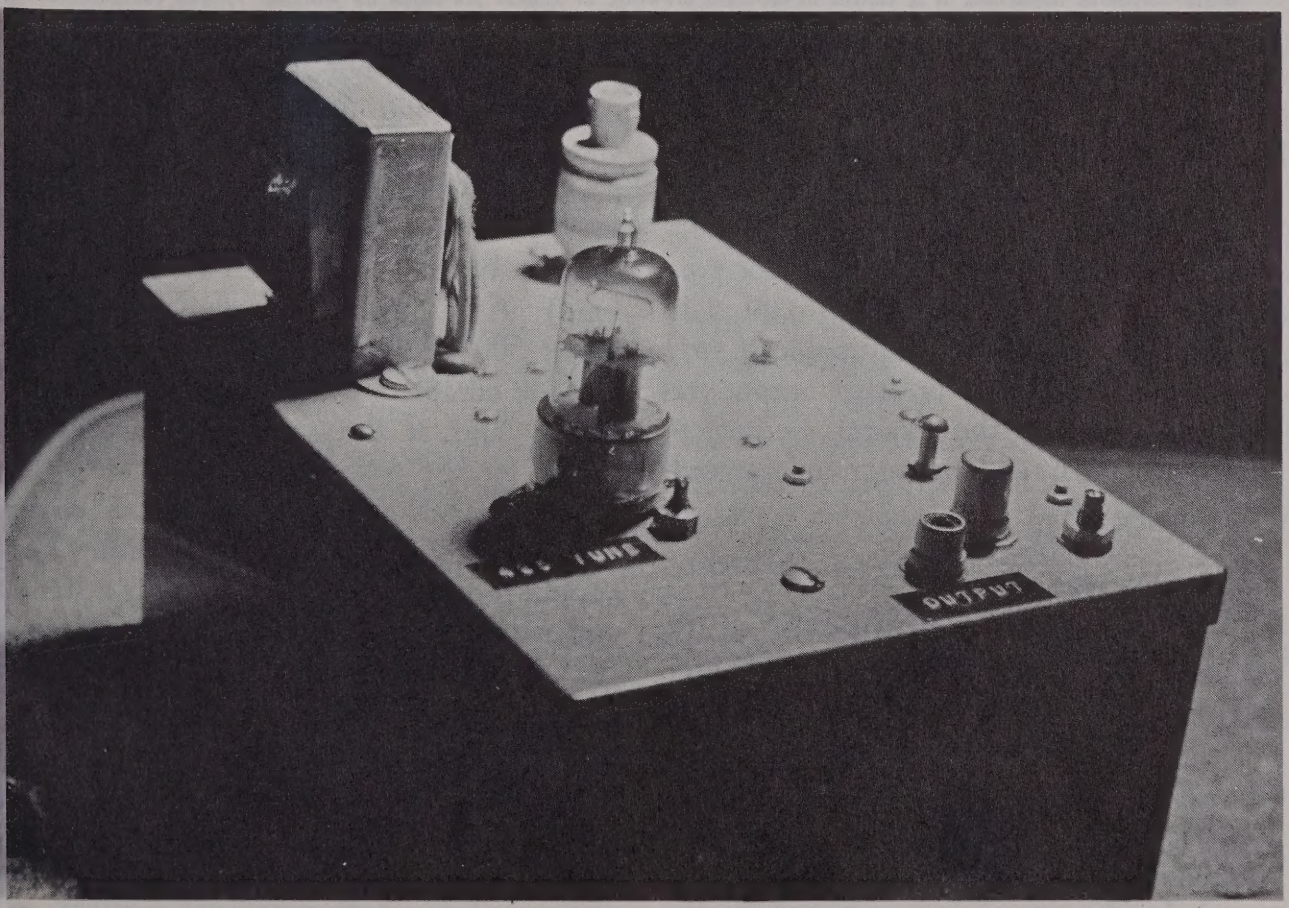

EXTERNAL VIEW shows very little of circuit exposed outside of 5 by 7 by 3 inch chassis box. 12AT7 tube in center foreground is oscillator; 6DS4 Nuvistor is mixer. Odd looking item at rear is BNC adapter on Type N antenna input jack. Since photo was made, small transformer has been replaced with slightly larger one. RF amplifier stages are beneath chassis.

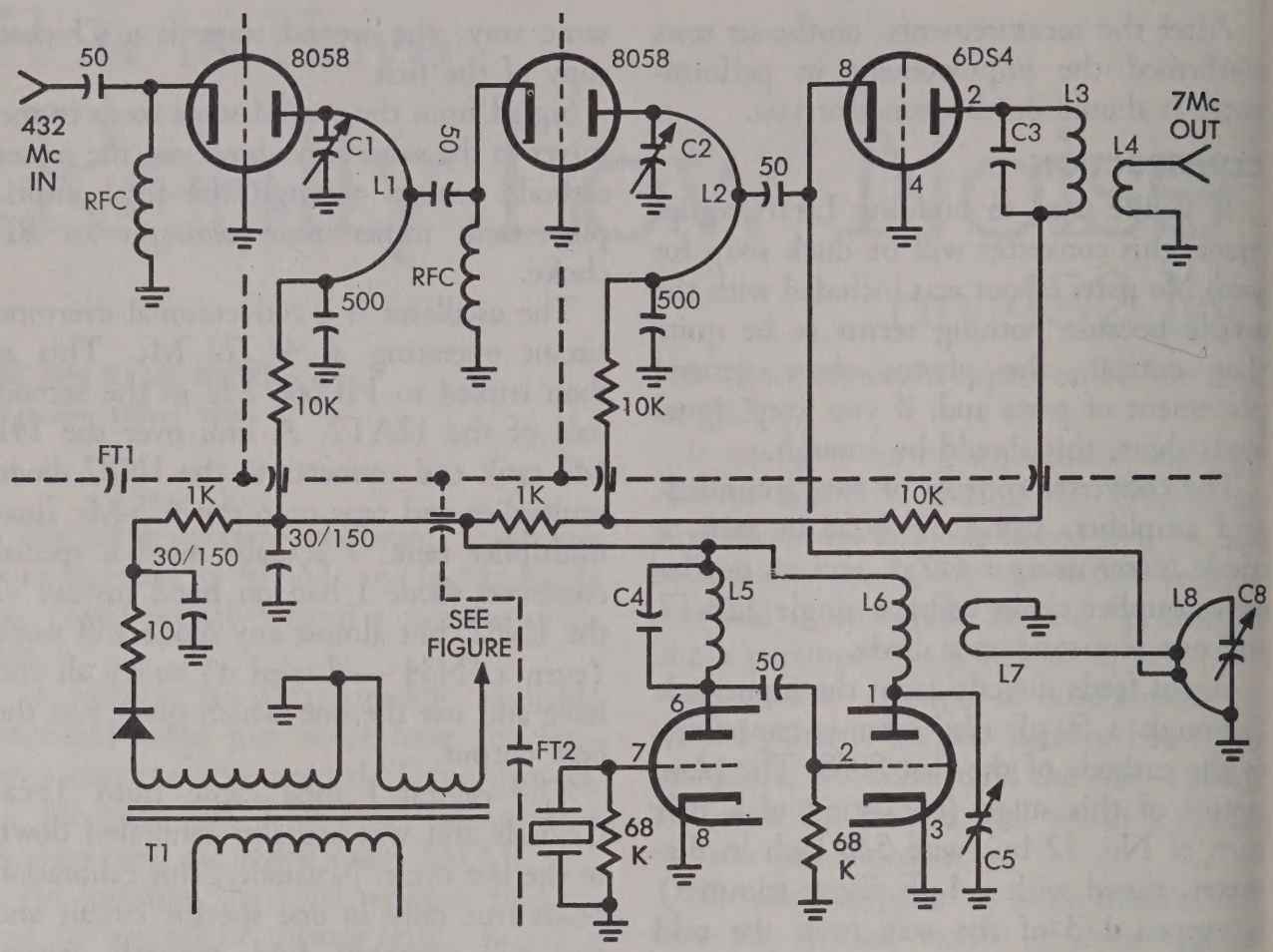

SCHEMATIC DIAGRAM shows all wiring except heater circuits. In grounded-grid amplifier at this frequency, heater circuit is important. It is shown in separate drawing. RF chokes are made by winding ½-watt composition resistor full of No. 26 enamel wire (about 9 inches of wire will do the job).

dozen cycles off at 425 Mc. Once you have the receiver calibration error in mind, though, this should make no difference.

The 425-Mc injection frequency was chosen to allow 7-Mc output. This is really too low an *if* for use at 432 Mc; 14 or even 28 Mc would be better but I wanted to use it with a special 7-Mc tunable *if* strip already in the shack. For other output frequencies, change the crystal frequency, multiplier coils, and output coil accordingly.

SPECIAL NOTES

This converter uses a multiplicity of RF chokes. J. W. Miller type RFC-420 or Ohmite Z-420 units will work nicely — but the ones used in the original unit consisted of 1/2-watt resistors (27K or higher) wound full of No. 26 formvar-insulated magnet wire. About 9 inches of wire per choke does it. Since so many chokes are used, this cuts the cost considerably.

One of the major factors in the ease of construction and use of the unit, too, is the liberal use of bypass capacitors. All these are the low-inductance stud-mounted variety, such as the Sprague BH-140 or the surplus variety (surplus ones were used here). Any capacitance value larger than about 500 pF is all right. These bypasses provide complete grounding for the UHF energy and at the same time act as tie points for the power connections.

Just to make things simple, a power supply was included in the converter. This supply provides 150 volts DC; it is a stand-and half-wave circuit using a silicon rectifier. The transformer in the photos is a Stancor type PS8415; this one is rated at only 15 MA and since the converter draws about 50 MA, the voltage at the tube plates was only about 35 during operation. When a type PA8421 (also from Stancor) was substituted, voltages came up to normal.

A special note about the 8058 socket and its mounting: This tube is designed for grounded-grid use and the grid connects to the metal shell. For this reason, the shield plates separating the stages (see photo) should be of some solderable material. We used perforated sheet brass since a good supply of this stock was on hand; copper sheet would be equally satisfactory if you can find any. The hole for the socket is cut and filed to the standard shape for Nuvistor sockets (a standard Nuvistor type socket is used) but after putting the socket in the hole and bending back the ears, bond it to the shield all the way around with solder. This assures a good ground and will prevent any chance of oscillation.

The particular type of box used was chosen because one end can be removed and all wiring done more or less in the open. Then buttoning everything back tight prevents any *if* leakthrough.

ADJUSTMENT AND ALIGNMENT

After everything is wired in and you have double-checked for wiring errors, plug in all tubes and turn on the power. Measure DC output voltage of the power supply; it should be approximately 150. Voltages at the Nuvistor plates should be in the region around 70 volts; if less, they are drawing too much current.

Using a grid-dipper or a receiver which will tune the frequency, check for 47-Mc output from the oscillator. Tune L5 for maximum output. Next, check for 141 Mc

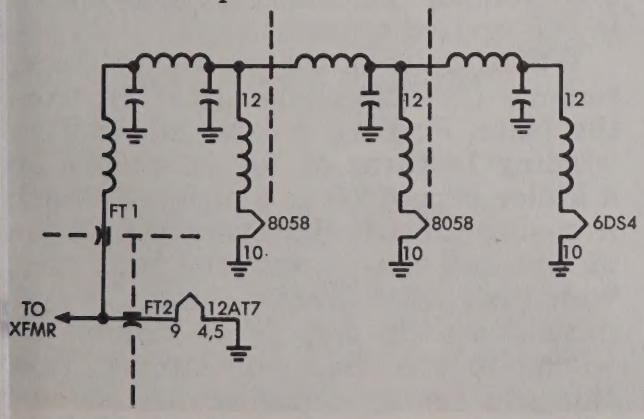

HEATER CIRCUIT shows liberal use of RF chokes and bypass capacitors. Bypasses are stud-mounting type such as Sprague BH-140 or surplus 500-pF units.

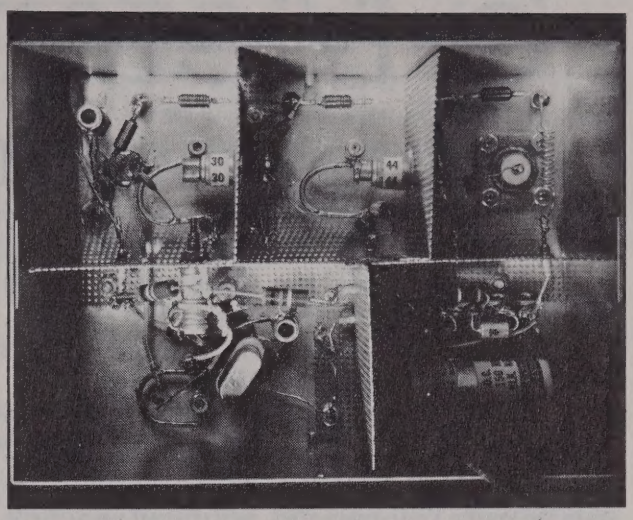

INTERNAL LAYOUT is shown in this photo. Parts placement does not appear to be critical so long as leads are kept short. U-shaped loops of wire at top are tank coils. Power supply wiring is conventional.

at L6. Adjust for maximum. C5 helps in this adjustment.

Now (unless you have a 432-Mc grid-dipper) provide an 8-Mc or 144-Mc test signal. Search the region around 7 Mc with the *if* receiver for your test signal (ours first appeared at 7.5 Mc due to a small error in the 8-Mc oscillator, which was then multiplied 54 times!)

When you find the test signal, tune C8 for maximum. Peak up L3, then C2 and C1 in order.

The converter is now working, but you can still improve it some. Try moving the taps on L8, one at a time, to get more signal output (ours was right the first time by pure accident, but small differences in construction can make a big difference in the tap point). The taps on L1 and L2, likewise, can be touched up. A noise generator is most helpful here.

PARTS LIST AND COIL DATA

L1, L2, L8 — ½ turn No. 12 bus wire, ⅝ inch diameter, ¾ inch long.

L3 — 28 turns, No. 26 Formvar on National XR-50 form.

L4 — four-turn link, No. 26, at cold end of L3.

L5 — 14 turns No. 28 on Miller 4300 form (¼ inch dia. iron-slug tuned)

(Turn to page 33)

6-Meter Meteor

DSB for 50 Mc - (Mostly) Factory-Wired!

There's no question that sideband is the coming thing on the VHF bands, just as it has taken over much of the phone operation in the HF range.

VHF'ers, more than most, appreciate the special advantages of sideband operation. When all your power is **talkpower**, you can get phone efficiency which approaches CW in its range capabilities! Math experts have calculated that SSB has a 9-db advantage over ordinary AM; in practice, VHF'ers have found as much as 25 db advantage.

But with all its advantages, sideband **does** have one major disadvantage. It's expensive, compared to any of the other modes.

It doesn't have to be. The Little Feller (in the November, 1962, issue) can be built for as little cash as a comparable AM rig. But if you're not a confirmed homebrewer from way back, you'll find it a bit heavy on the pocketbook region to go out and buy your way to VHF sideband.

That is, you will if you insist on **single** sideband. **Double** sideband, which has most of the advantages except savings of spectrum space, comes considerably cheaper.

For instance, WRL has a rig on the market (they call it the Meteor SB-175) which delivers a hefty punch of DSB signal — and sells for less than $100, factory wired!

Unfortunately for the VHF'er, the SB-175 covers only the HF bands, 80 through 10. However, it's only a one-evening job to convert it to 50 Mc operation. The result: a factory-wired unit (with your modification) delivering 70 watts PEP output to the antenna.

This 70 watts, bye the bye, is measured RF power. DC input at this level is just under 140 watts. The efficiency is only 50 percent — but at 50 Mc, 50 percent is more than fair performance.

In addition to the DSB features, you also have an AM rig and a CW rig all in the same package. Modes are selected by a front-panel switch. Output in the CW mode is 35 watts, since one of the final tubes operates only in the DSB mode. AM output is lower — 10½ watts — but is still good, considering that a confirmed sidebander will use AM only to explain to new contacts how sideband works.

Interested? Let's proceed.

The first step, naturally, is to check out your SB-175 to make sure it is operating properly in its original condition. If your license won't permit phone operation on 40 meters, test into a light-bulb dummy load — but test!

When you're satisfied that all is working well, take out the wire-cutters and soldering iron and dive into the wiring. CAUTION. Be sure the power supply is unplugged. We'll be working in the high-voltage area much of the time.

First step is to remove the bandswitch and all associated wiring. Remove the lower-frequency coil from the oscillator completely, and take eight turns off the lower end of the higher-frequency coil.

The next step is in the multiplier (5763) screen region, where the bandswitch selected different screen resistors. Jumper the connections, as shown in the revised schematic.

While you're in the multiplier stage, remove the RF choke (RFC2) from the plate. Prepare a new plate coil by winding 10 turns of No. 26 enamel on a Miller type 4400 coil form (3/8-inch iron-slug tuned). However, installation of this coil must await the next step, which is rather drastic.

This drastic step is to remove all wiring in the final grid circuit. Take the grid tuning capacitor off the top of the chassis, remove the grid coils, and take out all function-switch con-

nections to the grids (leave the switch wiring itself alone — we'll use some of it later).

With the grid circuit stripped, you'll notice the two holes in the chassis through which the leads to the grid tuning capacitor ran. Remove the grommet from the front hole; it's in just the right place for mounting the new multiplier plate coil. Install and connect the plate coil.

At this stage, the final-amplifier circuit should be completely free of components connected to pin 5 of either tube. Wind a new grid coil of No. 20 tinned bus wire; 4½ turns each side of center (9 turns total) on a 3/8-inch form worked here. Connect the two free ends of the coil to the two grid pins. Connect a 27K ½-watt resistor from the center-tap of the coil to the old R11 (a 1K resistor to ground, located on the tie strip beneath the bandswitch). Also connect a 25 pF ceramic capacitor from each grid pin to ground.

At this point, dip out the grid coil with a GDO. It should resonate between 50 and 51 Mc. Exact frequency is unimportant, since the tuning of the higher-Q multiplier plate coil will control the circuit.

Using No. 22 insulated hookup wire, wind a 1-turn link in the center of the grid coil. Twist the wire to form a twisted pair and wind a single-turn link around the cold end of the multiplier plate coil.

The next thing to do is modify the plate circuit.

Start by removing both the TUNE and LOAD capacitors. Remove also the existing pi-net coil. The old LOAD capacitor can be added to the junkbox. The old TUNE capacitor should be mounted in its place.

NOTE: For simplicity, we did not remove the old TUNE capacitor. Instead, we left it in place and put our new TUNE capacitor, a 25 pF Hammarlund variable, where the LOAD capacitor has been located.

Wind a new coil of 4 turns of No. 12 tinned wire on a 1-inch diameter form and connect it from the stator of the new TUNE capacitor to the stator of the LOAD capacitor. Run a lead from

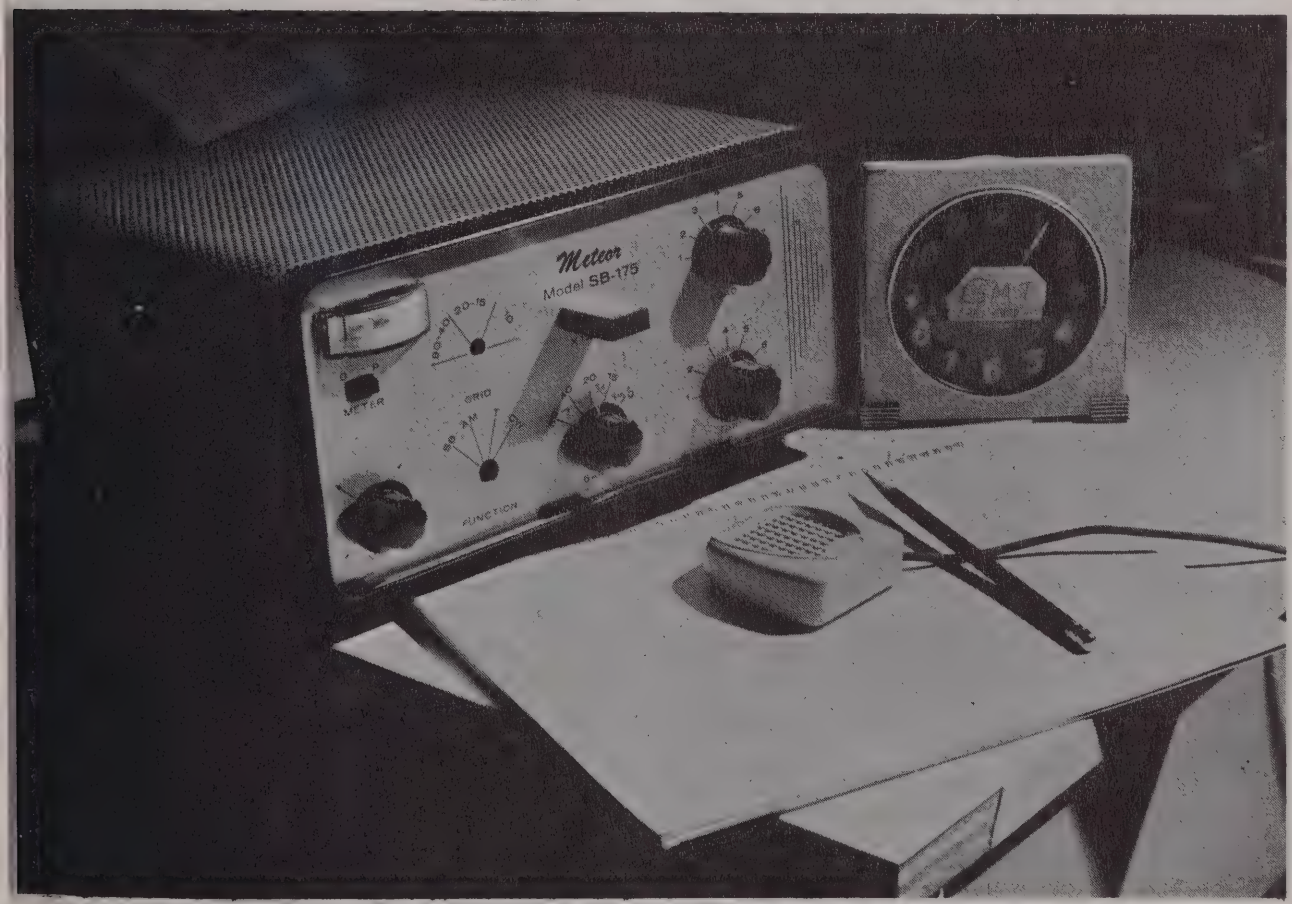

SET UP AND READY TO GO, the 6-meter Meteor shows remarkably little external change. In the one we converted, the function switch was moved to the old bandswitch position in an effort to retain the original circuit as much as possible. In the final conversion, though, moving the switch turned out to be unnecessary. Your unit should look like this except that the vacant hole will be in the center instead of at the left side.

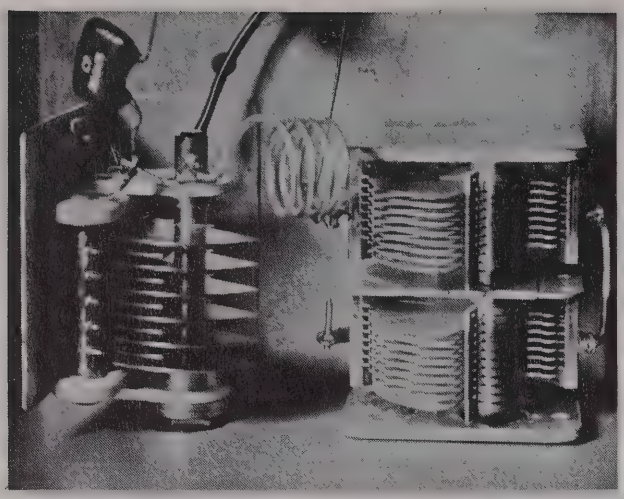

NEW PI-NET TANK details are shown in this view. Old TUNE capacitor was retained as loading capacitor; old LOAD capacitor was replaced with Hammarlund 25-pF tuning capacitor. New coil was wound from material in original coil.

the LOAD capacitor stator to the coax at the rear of the chassis.

Now comes the surprising part. Remove both parasitic suppressors and replace them with No. 12 wire leads from the plate caps to the junction point. By converting to a single-band rig and eliminating the originally long grid leads, we have also eliminated the parasitic problem.

Now, only one step remains before you can start your on-the-air adjustments. We must make provisions to kill one final-amp tube in the AM and CW modes.

Fortunately, the wiring originally provided on the mode switch to transfer one grid from the parallel to the push-pull connection is ideal for our purpose.

Locate the wafer which contains this wiring (it's the rear one; this set of contacts can be identified by the in-and-out pattern of jumpers). Remove the striped wire from pin 7 of the 6DQ6 nearest the front panel and reroute this wire to the switch terminal which formerly went to the grid of V4. Connect the switch terminal which formerly went to the "uncluttered" end of the final grid tank to pin 7. This will make the filament circuit complete in the SB position and will remove one 6DQ6 in all other modes.

If you want to use the rig on 12 volts, a resistor of the proper value and wattage to duplicate a 6DQ6 filament must be connected from the other switch terminals (the strapped ones) to ground to replace the 6DQ6 filament in the non-SB modes. Since we intended to use the rig only at a fixed location, we omitted this resistor.

ADJUSTMENT

Adjustments pretty well follow the Meteor instruction manual; set the mode switch to T (for tune) and the meter switch to G. Tune the oscillator plate coil and the multiplier plate coil for maximum indicated grid current. This is easier if both are dipped to approximate frequency before you start.

Next place the switch in AM position and connect to a dummy load. Set the LOAD capacitor to maximum and the meter switch to P. Apply power and dip with the TUNE capacitor. Tuning and loading are the same as with any pi-net unit.

However, since only one 6DQ6 is in use, you won't be able to load up to the red marks indicated on the meter. About halfway to these positions is correct for AM and CW.

CW tuneup is the same as AM except that since screen voltage is a bit higher, it's easy to get color in the tube plate if it is operated off-tune. Best way to tune up here is to first tune on AM and then touch it up a bit after switching to CW.

For SB, tune in the AM position and then leave the tuning controls alone. Advance the mike gain until the meter just touches the red SB block on voice peaks. On-the-air reports from qualified operators provide the best check of sideband modulation quality.

ADDENDA

This just about wraps up the conversion except for one final note. Discussions are under way with WRL Manufacturing, makers of the Meteor, looking toward their production of either an adapter kit or a replacement front panel to help you make this conversion and retain a "factory" look. Exact contents of the kit, as well as price, have not yet been announced. If you're interested, drop a line to Ed Shulman, chief engineer, WRL Manufacturing, Council Bluffs, Iowa — he'll have the latest poop on it!

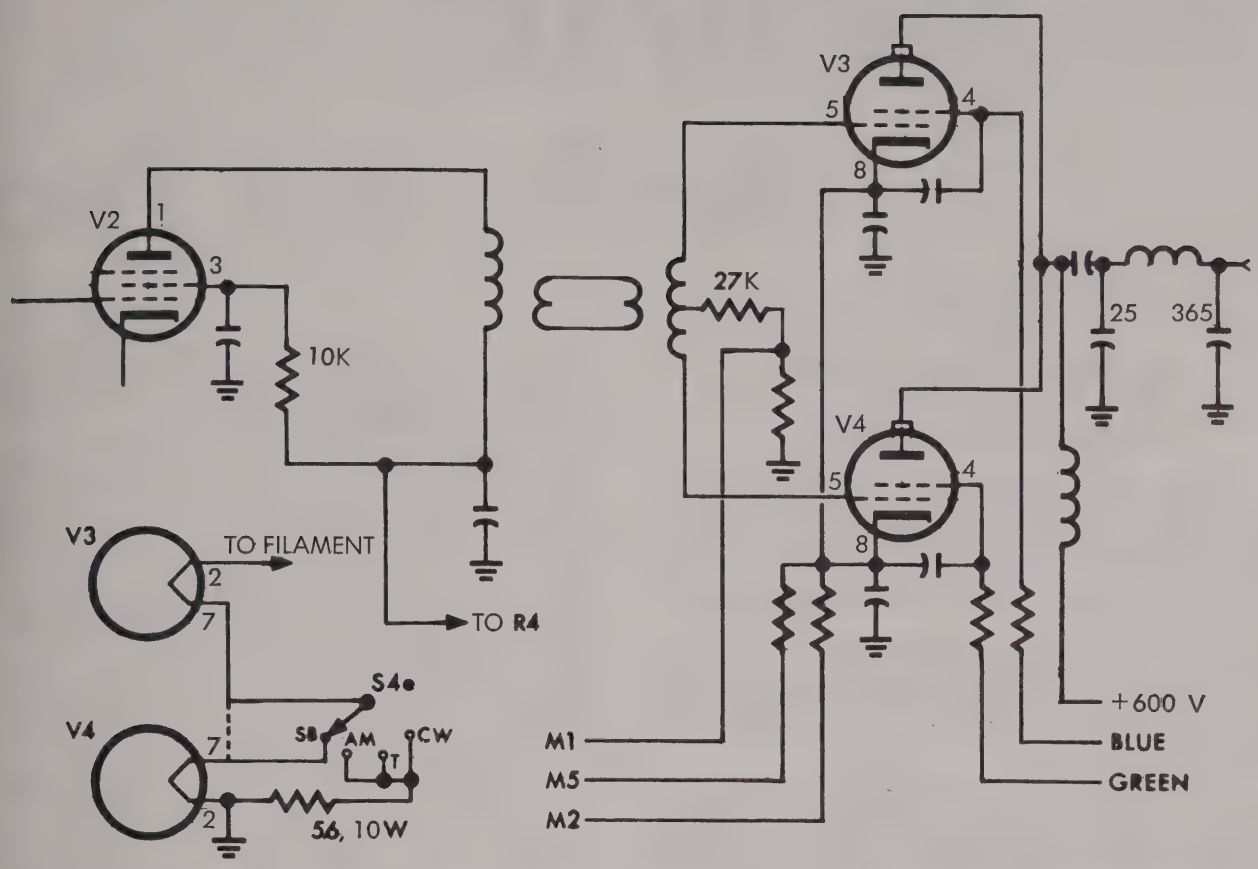

REVISED SCHEMATIC shows circuit changes involved. Unlabeled parts are original factory-circuit items; labelled parts are those changed or added. Unless otherwise noted, capitance values without decimal point are in picofarads (mmf) and those with decimal point are in microfarads. Resistance values are in ohms and all resistors are ½-watt.

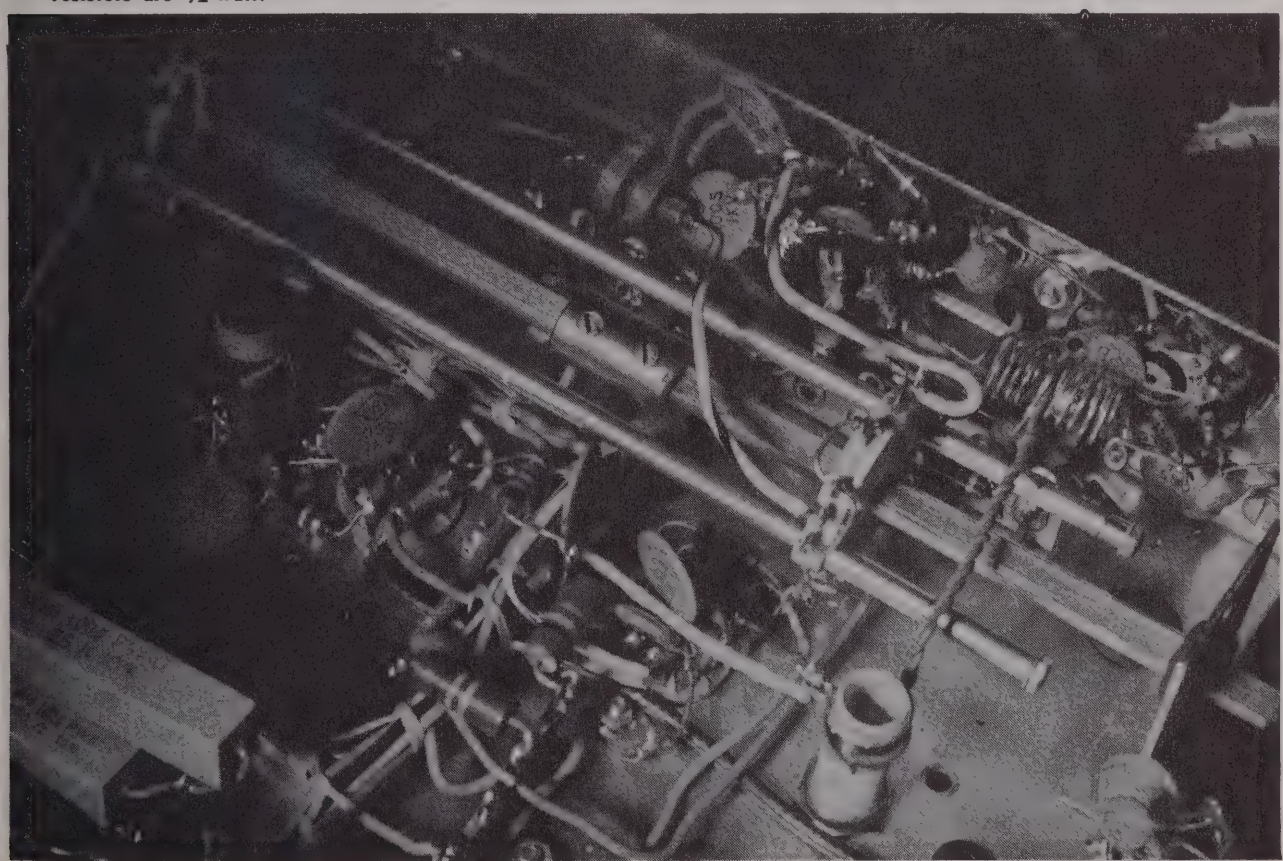

UNDERSIDE CHANGES are spotlighted in this view. Most major change is in the region from multiplier plate (center of photo) to final grids (upper right). Added coil is shown clearly, as is new final grid coil. Note connection of wires to back wafer of function switch. Striped wire is original lead to 6DQ6 heater while the the other wire runs to the heater pin. In SB position, this circuit is completed; in all other positions it is open. Function switch position will not be as shown here in your unit; rear wafer will be just to right and behind 25K 10W resistor at left of photo. This will simplify grid-coil installation.

The AM-33/ART for Six and Two

by **WILLIE MAYES, K5ZND**
3509 Woodside Drive
Midwest City, Oklahoma

Here is my version of the AM-33/ART power amplifier. It works swell for me; total cost for 500 watts plus some was about $5 plus a cleaner junk box!

The original AM-33/ART was a noise pulse amplifier designed to convert a 60-watt signal to an output of 250 watts.

The amplifier originally operated with negative 2000 volts on the grids, and the plates grounded through an RF choke (or in other words, a positive-ground supply system).

To convert the amplifier to one tuning both the 6 and 2 meter bands is extremely easy. Input to the converted rig will range from 600 to 850 watts in a package that measures only 10 by 9 by 9 inches including the tube blower fan! I have converted two of these units with no difficulties.

THE CONVERSION

Start by getting rid of the 400-cycle power supply. Saw off the chassis a half inch behind the amplifier itself.

Next, modify the input circuit by lifting the grounded end of the link coupling and insert a 50 pF variable capacitor in series between the link and ground. This makes easier the job of input tuning.

Leave the grid circuit intact (it will reach the 2-meter band with a little straining although it was rated only to 100 Mc). Bring the center-tap of the RF choke to a terminal for grid bias voltage. Bias requirement will be approximately minus 110 volts, to run a no-signal plate current of 40 to 50 MA.

Next, the filament wiring was modified slightly, by lifting the grounded side and wiring the filaments in parallel. If you have a 10-volt transformer in your junk box instead of the 5-volt unit I had, leave them in series.

Modification of the plate circuit consisted of removing the original antenna link winding in the plug-in coil, and winding a new link from two turns of wire with good high-voltage insulation. I stripped the shield from a piece of RG-58 coax and used the center conductor. Next, lift the grounded end of the link (at the socket pin) and insert a 100 pF series capacitor to ground.

To complete the conversion, lift the center tap of the plate coil socket from ground and insert an RF choke. I wound the choke from 40 turns of No. 28 enamel wire on a 5/16-inch diameter standoff. Bypass both ends of this choke to ground with 500 pF TV doorknob type capacitors.

High-voltage requirement is 2000 volts, more or less. Check manufacturer's ratings for various operating conditions for the 4E27's.

One final caution — don't forget to ground the tube-socket subchassis. It originally floated 2000 volts negative to ground. I used several 1/4-inch wide copper straps to bond it to the main chassis.

That's it; have fun, and I'll see you on six!

—K5ZND

SCHEMATIC DIAGRAM (opposite page) shows circuit of amplifier after modification. Unlabeled components are those of original circuit. Electrical changes are minor although physical changes are not if full conversion is made. Not shown on schematic is blower wiring; if operation at full power is anticipated blower motor should be wired to 24 VAC to provide proper cooling of 4E27's.

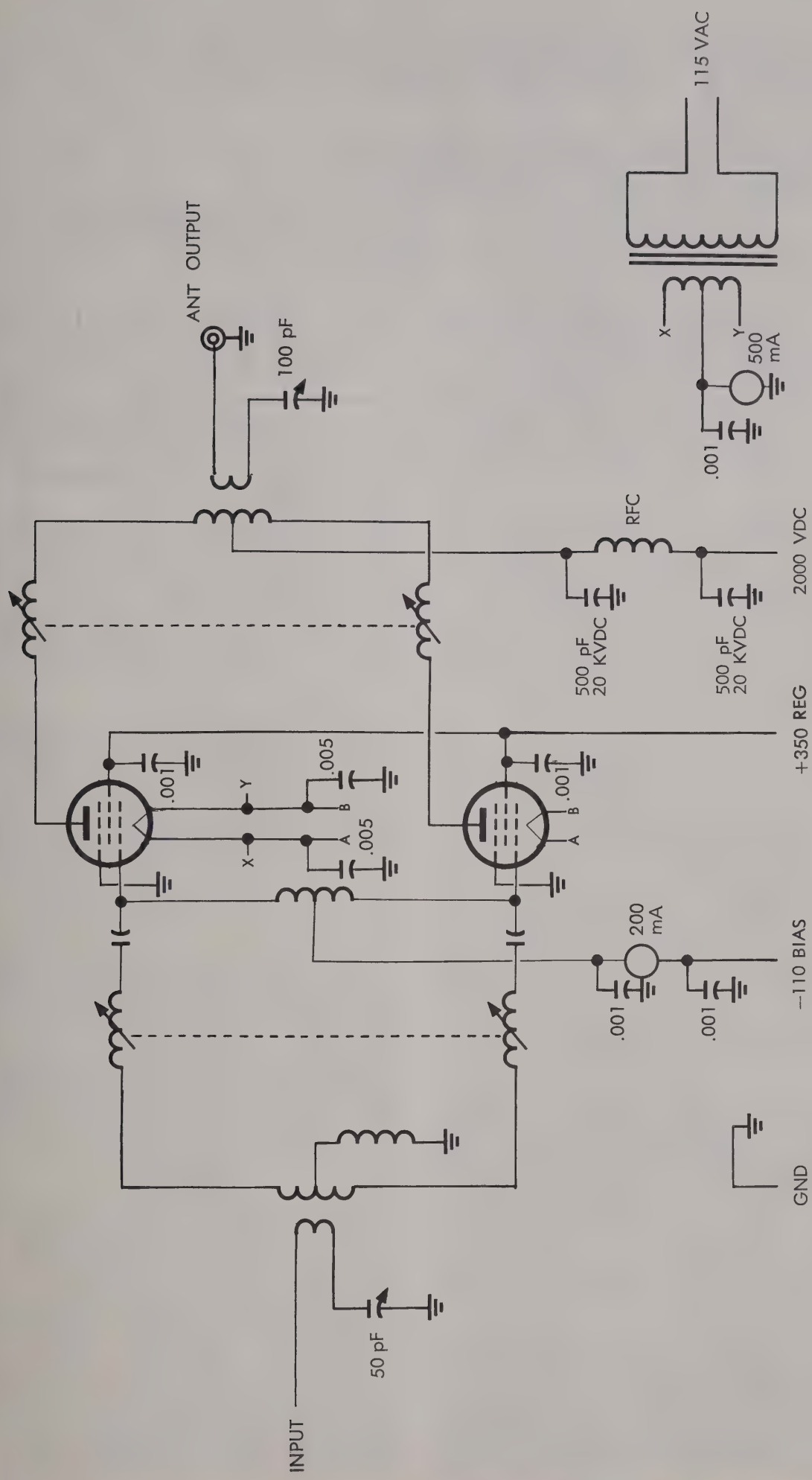
115 VAC
X
Y
500 mA
.001
ANT OUTPUT
100 pF
RFC
2000 VDC
500 pF 20 KVDC
500 pF 20 KVDC
+350 REG
.001
.005
Y
B
X
A
.005
.001
B
A
200 mA
.001
.001
—110 BIAS
GND
50 pF
INPUT

Utility 8-Megacycle Oscilator-Buffer

by Paul M. Wilson, W4HHK/A4HHK
Southern Technical Editor
VHF Horizons

The unit described is an eight megacycle crystal oscillator/buffer for use with a VHF transmitter. It has good stability and the frequency may be varied over a small range by adjusting an air dielectric variable capacitor. These features simplify generating a specific VHF frequency and maintaining it.

No claims are made for originality. The oscillator circuit was recommended by International Crystal Mfg. Co. of Oklahoma City, Oklahoma, for use with an 8.0 Mc crystal calibrated for a 32-pf load. The cathode follower/buffer circuit was borrowed from the ARRL Handbook (ref. page 148 of the 1962 edition). It is used by the writer to drive a 5763 tripler stage in a 144 Mc transmitter.

When multiplying 18x (from 8.0 Mc) to reach 144 Mc or 54x for 432 Mc work, the slightest drift at the crystal frequency becomes a sizeable amount. For example, a drift of only 55 CPS at 8.0 Mc would result in a Kc change at two meters. This may not sound like much, but when received on a selective system it can be very annoying. Good stability is not achieved by using any old crystal and circuit. It is obtained by employing high quality components, regulated voltages, and stabilization of temperature.

The crystal oscillator should be used only for frequency generation . . . not power. In the circuit persented, the oscillator is run at very low power level and a cathode follower and buffer used for isolation and developing of drive power. The unit in use at this station also employes a large oven and separate power supply to reduce and regulate ambient temperature.

In the oscillator portion of the circuit, the 12 and 75 pF condensers should be of the zero temperature coefficient type or silvered mica ones as a substitute. The condenser shunting L1 should be a silvered mica. The 1 millihenry choke is a National R-50. The coupling condenser between L1 and pin 6 of the 6C4 should be a silvered mica or mica as should the 12 pF across L3. All by-pass condensers are disc ceramics. The 3-35 pF air trimmer used was a Hammarlund HF-35. A small knob on the shaft makes frequency adjustment easy. At two meters the frequency range is about 25 Kc.

A crystal calibrated for 8,000 Kc with a 32 pF load may be adjusted to produce any two meter frequency in the range from approximately 143.985 to 144.010 Mc. This includes the MARS frequency 143.990 Mc and the first ten Kc of the amateur band. The adjustable range at 50 Mc would be about 8 Kc.

Although a copper shield was used to isolate the input and output of the 5763 buffer, and other stabilizing techniques employed, this stage had to be tamed by loading L2 with a 3.9 K resistor and L3 with a 22 K one. The oscillator and cathode-follower should run continuously for maximum stability.

Good shielding and filtering of leads leaving the oscillator compartment will eliminate or reduce to a negligible amount the oscillator signal present when receiving. The 5763 stage receives plate and screen voltage only when the transmitter is in transmit condition. The oscillator might be used to drive a low power multiplier stage direct, but power output from it is small.

COIL DATA

L1—National XR-50 form, 43 turns close wound, No. 28 enamel wire.

L2—National XR-50 form, 36 turns close wound, No. 28 enamel wire.

L3—National XR-50 form, 50 turns close wound, No. 28 enamel wire.

L4—Output link made of two turns of small plastic overed wire wound over the coil end of L3 and cemented in place.

Note: Unless specified otherwise, capacitances are mmf, decimal capacitances are in mfd,

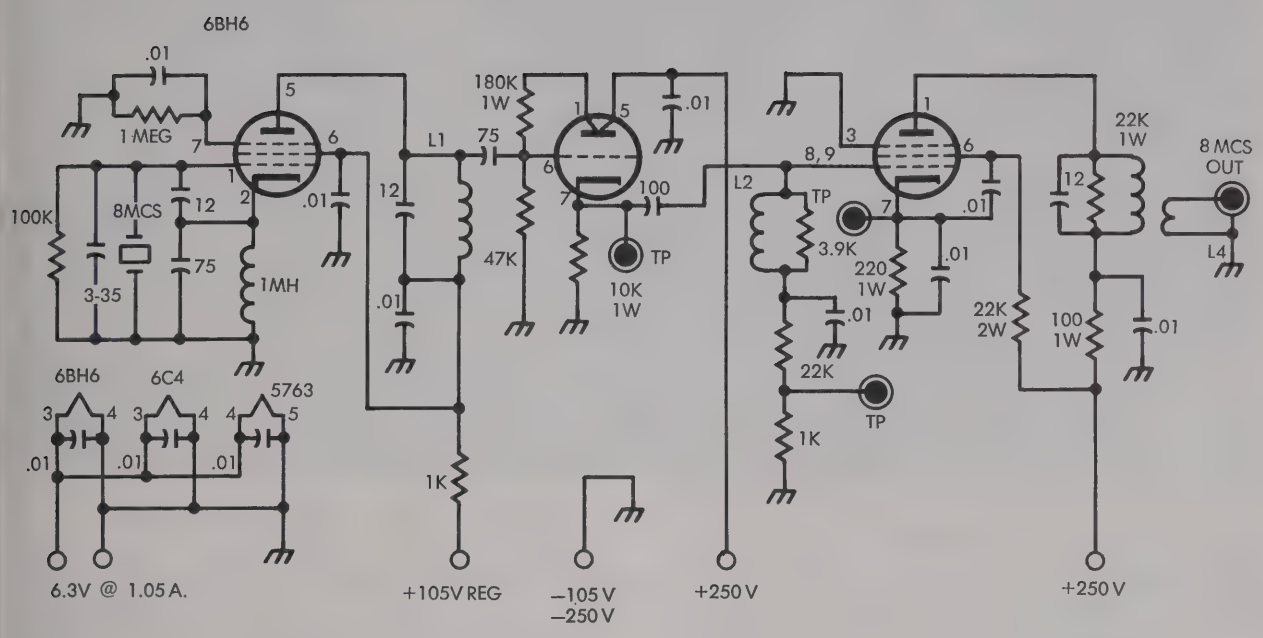

8-MEGACYCLE OSCILLATOR-BUFFER SCHEMATIC diagram shows all wiring details. Power requirements are small.

69-cent Heat Chimneys

by Don Goshay, W6MMU
8352 Westlawn Avenue
Los Angeles 45, Calif.

In order to provide proper cooling for the base seals of 4-125A, 4-250A, and similar tubes, the pressurized chassis principle is frequently employed. This system involves making the space below the chassis surface airtight and forcing air into the confined area by an internal or external blower.

Since the only means for the cooling air to escape from the pressurized subchassis is through the ventilated tube socket and tube base, effective cooling is provided to the filament, screen, and grid seals. However, after cooling these seals, the air escapes in such a manner as to provide little, if any, cooling to the plate seal at the top of the glass envelope.

Frequently, a heat-dissipating plate connector is the only avenue of heat transfer (other than by direct radiation from the anode itself) available for heat generated by plate and seal dissipation. The later dissipation is often quite high when operating above 100 Mc.

If additional envelope cooling is needed, a second blower or fan can be placed above the chassis to circulate air around the envelope and plate seal. However, it is simpler to install a chimney around the tube which will divert the air leaving the base ventilating holes in such a fashion as to cause it to flow around the glass envelope and, to some extent, around the plate connector.

Such a chimney must meet the following requirements:

1) It must reflect as little heat as possible back onto the tube envelope.
2) It must absorb a minimum of heat from the normally red-hot anode.
3) It must be capable of withstanding whatever heat *is* absorbed.

(Turn to page 35)

Using the R-449

by John Chambers, W6NLZ/A6NLZ
VHF Research Consultant
c/o VHF Horizons

When considering the surplus receiver R-449 GRD-5, the tuning range of 120 to 156 Mc quickly catches the eye of the VHF man. This unit was recently added to the surplus market. It is newer surplus than much we have seen since World War II. It has some potential, but also has serious limitations. The unit is less than ten years old, and could have turned out to be a real fine item, but because of a series of factors it is limited.

It was intended for direction finding service, but also is capable of operating as a 9 channel (auto tuned) crystal controlled —plus one tunable channel receiver. Boy! What a deal for a MARS net frequency, a rag chewing net, and a few spot frequencies. To compute the correct crystal for the net frequency you want to hit, the formula is:

$$\frac{\text{Dial frequency in Mc} + 15.09}{3}$$

The crystal holder type is CR-23U. To set up a new crystal channel, the procedure is as follows:

STEP 1. To use crystal extractor remove it from the front panel. First, loosen the knurled locking nut at the large end of the holder; then insert the proper crystal into the forked end of the holder with the two crystal terminals extending away from the tool; then tighten the locking nut. The crystal is now firmly clamped in the fork of the holder.

STEP 2. Tighten the "Autotune Lock".

STEP 3. Turn power "ON-S'BY-OFF" switch to the "S'BY" position.

STEP 4. Open crystal insert door located directly beneath the "R.F. ALIGN" knob; place the left thumb firmly on interlock switch button which appears when crystal insert door is opened; turn "CHANNEL" selector switch until desired channel number appears beneath the crystal socket (seen by looking into the r-f unit casting through the open door in the front panel).

STEP 5. Release thumb from interlock switch to disable Autotune; insert the crystal in the socket directly above the channel number making sure it is firmly seated in the socket.

STEP 6. Close crystal insert door.

STEP 7. Turn "CHANNEL" switch so that channel number corresponding to that set in step 5 appears as the channel selected.

STEP 8. Loosen "AUTOTUNE LOCK". Rotate "OFF-S'BY-ON" switch to "ON".

STEP 9. Turn the "R.F. ALIGN" knob until dial rotation begins.

STEP 10. With the "R.F. ALIGN" knob, set the frequency reading on the dial to *five megacycles below* the r-f frequency for this crystal.

STEP 11. Turn the "R.F. ALIGN" knob very slowly counter-clockwise to increase the frequency and watch meter above "TUNING" until it "kicks in".

NOTE: In turning the "R.F. ALIGN" knob clockwise from *low* to *high* frequency, the oscillator "TUNING" meter will register a sharp, rapid current increase (called the "kick-in") followed by a gradual decline. From high to low frequency the reverse occurs. In adjusting "R.F. ALIGN", *always* tune from low to high.

STEP 12. Continue to turn the knob very slowly in the high frequency direction until the voltage indicated by the oscillator "TUNING" meter reaches a maximum and is then reduced by one meter scale division below this maximum reading.

STEP 13. Tighten the "AUTOTUNE LOCK".

STEP 14. Turn the "Channel" selector switch to any other channel, then return.

STEP 15. If the oscillator "TUNING" meter reads the same as in step 13, the operation has been performed correctly. If

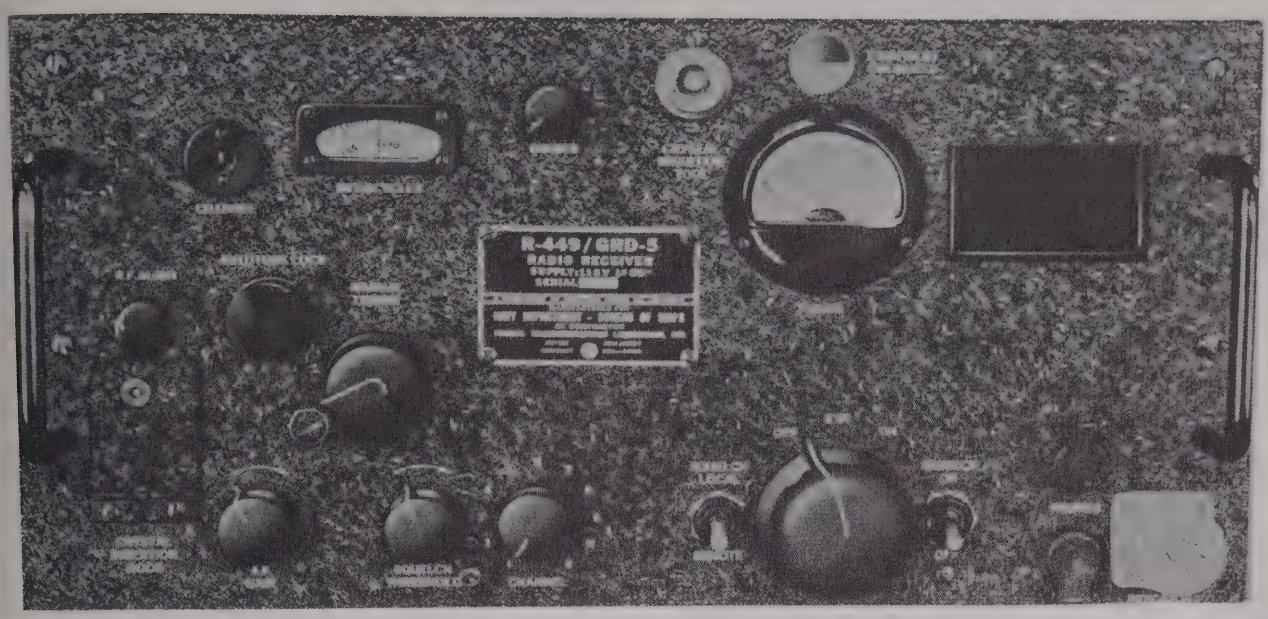

THIS IS THE R-449 as pictured in the official handbook on the unit. Most units available are in similarly good condition.

not, repeat the operation starting with step 7.

The most important crystal is the one marked "MAN". This is for channel 10—the manual channel. It really isn't a crystal, but a holder with an 81 ohm ½ watt resistor in it. If you can't find an 81 ohm resistor, any value from 47 to 100 ohms appears to work equally well.

The power connects to a receptacle (J107) on the rear of the chassis. You probably won't be able to find a mating plug so just solder the 115 volt line to the two pins (A and B) then plug in the line. Hopefully you will be greeted by a noise that will remind you of the last time you visited a cotton gin. Don't despair: it's just the blower fan designed to keep the cabinet cool. I recommend cutting off the leads to this terrible device — then use a 1-1/8" socket punch to knock a few holes in the cabinet for ventilation. Another thing to cool the beast off: pull out most of the tubes in the indicator part of the circuit. These tubes were intended to work with the direction finding device, and as part of a communications receiver do nothing but heat up the place. To deactivate the direction finding circuit, remove tubes V117, V123, V124, V125, V126, V127, V128, and V129.

Now, more about the set as a receiver: The dial, as shown in the illustration, is calibrated in megacycles and covers well above and below the two meter ham band. It has an S meter calibrated in microamperes, squelch, dimmers for the lamps, good audio, and typical battleship construction. It weighs about 60 pounds and comes with brackets for rack mounting if desired.

Let's consider a few things wrong (later we'll discuss more good points). The sensitivity just isn't so hot. It's rated for 10 microvolts, which is pretty bad by modern standards. It is about on a par with a 522 or a VHF 152, and it is not as good as the old Gonset Communicator 1 by at least 15 db. This means you're not in the DX business at all. However, for talking around town it works.

The *if* amplifier contains 12 tuned circuits (not a compromise).

To get back to the front end: The R.F. assembly is beautiful. A cast honeycomb of aluminum shields all the components of the R.F. and the oscillator chain. It looked so good it was hard to believe it wouldn't work any better than it does. A 6AK5 R.F. stage and 4 tuned circuits are followed by a 6AK5 detector. Despite the excellence of the construction it just isn't much of a performer. It's tempting to consider putting modern tubes in the RF and mixer and seeing if the old girl couldn't be modernized. I haven't tried this yet, and may not for a long time.

Conclusion: It is not a receiver for the fellow out of town; it is a big city receiver for the net man where distances are small and signals are loud. Let us hope a future surplus receiver that looks this good will be a little better performer.

Noise Cancellation

by Ken Durham, K5MBV
3006 Donald Drive
Garland, Texas

Most VHF operators are interested in signal to noise ratio and the improvement of same, since the ratio is the *only* factor that determines how far we can hear a signal. The method described here to improve the ratio applies to power leaks, ignition noise, and other man-made noises that causes so much trouble for the serious operator.

THEORY OF OPERATION

Two receivers are coupled to a common converter (see Figure 1). One of them is tuned to the desired signal; the other is tuned to an unused portion *of the same band.* When the noise output amplitude from this second receiver is adjusted (by use of receiver gain controls) to be equal to that in the signal channel, the noise will *cancel* if the phasing is correct.

This cancellation will not affect any signal coming from one receiver only It is the same principle used in the hybrid phone patch.

Both receivers should be adjusted for as narrow a bandpass as can be used. Audio, ringing, AVC characteristics, and everything else about the receivers should be similar. This will probably require some modification of one or both receivers, unless you are lucky enough to have two identical, good receivers.

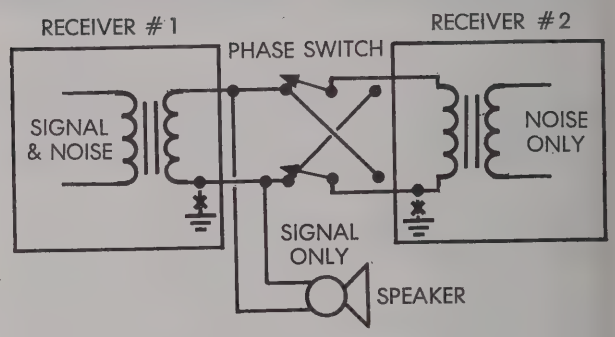

The grounded sides of both receiver output transformers should be lifted from ground (Figure 2) and brought out with the other audio lead so that the proper phase can be selected. Use a DPDT switch as

(Turn to page 37)

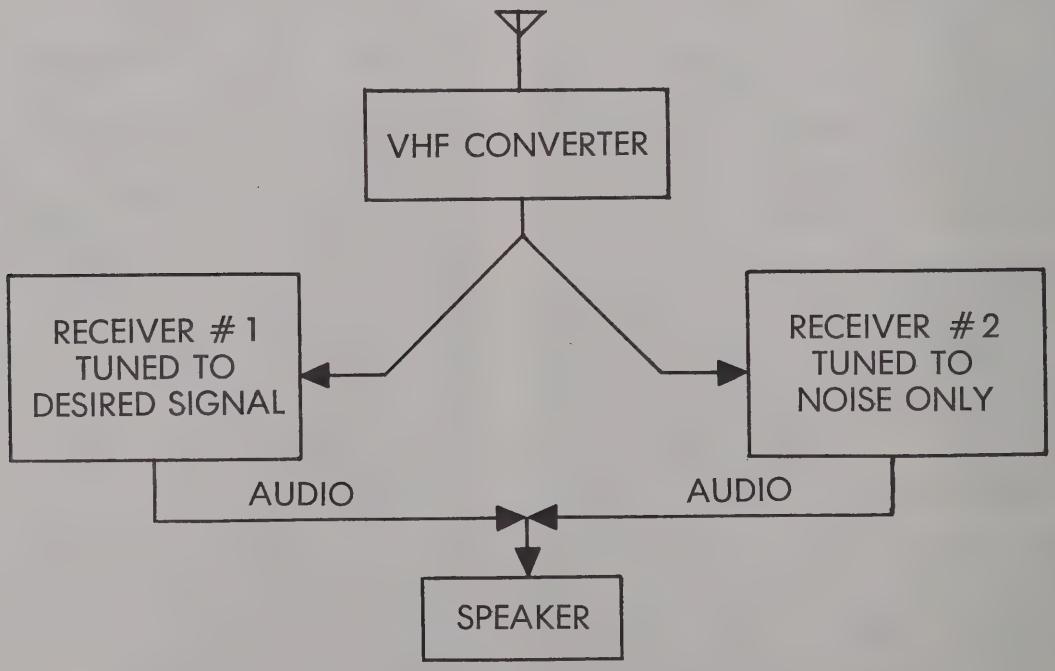

QSO Showboat

by A. DAVID MIDDELTON W5CA-W7ZC
ex-W2OEN Staff Historian, VHF Horizons

A fall afternoon is a pleasant time in rural New Jersey. It was Saturday and I had just returned from a walk in the lazy Indian Summer day. I strolled into my ham shack at W2OEN and sat down at the operating table, an apple in one hand and a pencil in the other and began to make notes in my log book. "Saturday, Nov. 1, 1941—2 PM" I wrote. "A2-A3 emission; Power input 10 watts; 2½-meter band; Frequency —113 Mc."

While the filaments were warming I looked around the room and out the windows. This was a rewarding scene, at W2OEN, and a peaceful vista there in Middletown, N. J., in that fall of 1941 just prior to fateful December Seventh.

Looking out the windows in the left wall I could see across the broad rolling acres of the famous Beekman Orchards, where my landlord-neighbor-friend, Mr. Ed Beekman, Sr., raised his premium fruit and produce. A look farther north thru another set of windows revealed the faint line of the Edison Bridge, which at night, was festooned with garlands of lights, jewels on a long necklace that stretched out in the distance. The northeast view from the shack was cut off by a slow rise of the ground but even this view was gratifying for on this knob sat my big V.H.F. beam on its wooden mast.

Before me on the operating table sat my faithful 1934-built c.w. transmitter and my HRO. At just the proper angle for my tuning hand was my red-hot 2½-meter receiver. Lots of long hours and experimentation had gone into this package. Bill Conklin, writing in RADIO, in his v.h.f. column had given this "W2OEN French 75" 2½-meter receiver a lot of publicity.

The receiver had a coaxial tank made from a shined-up brass French 75 shell

About the Author - Our 'Newest' Staffer

There was little ham activity in the railroad town of Grafton, W. V., in the pre-war One days, when W7ZC-W5CA became interested in ham radio. He never saw a working rig nor heard a signal for two years—until he moved to Indianapolis in 1919 into a hotbed of ham activity by some of the Greats of those days of roaring SPARK! Licensed in 1921 as 9BJL, David went thru the various stages of hamming and now has his 17th call. He began VHFing in 1931 when Ross Hull and Clark Rodimon made their technical breakthru on 5 meters, and he has been at it ever since.

His amateur radio engineering experience includes tours of duty with Meissner, Stancor, and Guthman Mfg. Companies. Later he put his hamming experience to good use at Fort Monmouth Signal Labs in the Vehicular Radio Section, and with Submarine Signal as a Radar tech-rep. After the war he was Assistant Editor of QST and later Roving Correspondent for CQ Magazine. From 1948 to 1959 he was a Staff research Engineer at Sandia Laboratories, developing sub-miniaturized telemetry gear, and is one of the pioneers in the use of printed circuitry.

David has been a regular contributor to all the ham journals since RADIO NEWS published his first article in 1929, and VHF HORIZONS now presents QSO SHOWBOAT, a narrative bit of nostalgic VHF history —a QSO typical of those which have long made VHF operation one of the more intriguing facets of ham radio.

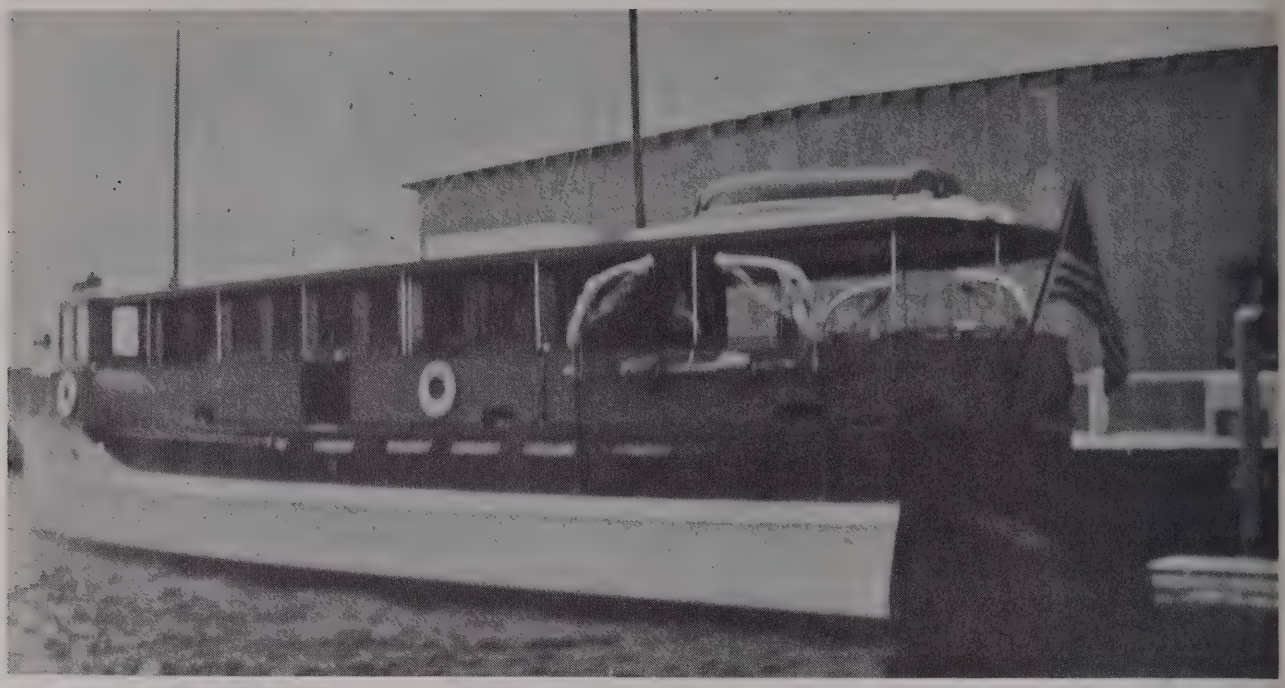

THE YACHT "SHOWBOAT" at dockside 22 years after the events chronicled in the article. Note size of vessel.

casing, a relic from WW One given me by a friend. This length of tubing, with a center rod, aided by a band-set and a band-spread capacitor, tuned the 2½-meter band and a bit to spare on each end. The Early Warning radar at Twin Lights provided a good marker at about 111 Mc. A small metal panel attached to the end of the 7 X 13-inch chassis held the usual regeneration control and a well-worn but smoothly-operating Marco dial with its slim fiduciary line and the delicately-marked numerals.

The receiver circuit? Simple, OM. As most of the good receivers were in those pre-war years. A 955 "acorn tube" in a ceramic socket, in a super-regenerative circuit as a detector, plus a stage of 6J5 and a 6V6 output, for the audio, comprised the entire receiver. A wireloop at the ground end of the center conductor was adjusted to give the correct antenna coupling. This receiver was stable and, by 1941 standards, selective and easy to control. The "super-regen" action was obtained with about 8 volts on the plate of the 955. This was an excellent receiver. The latest and best of a long series of prototypes.

The transmitter was the RF power section of a Stancor 112T transceiver I had designed at Stancor as a kit. The 112T used the famous Woody Smith transceiver circuit originally described in RADIO. It was an HY75 triode in an ultra-audion circuit. The Heising modulator was a 6V6 with a 6J5 to boost the output from the F2 carbon mike button. Input? about 10 watts; loosely-coupled as it was to make it more stable since it was self-excited. *Output?* who knows! Maybe 3 or 4 watts or even less. An antenna-change-over relay connected the receiver and transmitter to a pair of wires spaced with 2-inch wooden (parrafined) spreaders. The line led to a spot over the window where it passed thru the wall in Pyrex feed-thru tubes. The feed line ran across the yard and up the hill to the base of the mast. I could see the feedline as it laddered its way into the distance where it terminated at the mast.

On top of that mast was W2OEN's pride and joy! A huge 16-element vertically-polarized beam for 2½ meters. This was one of the first and biggest multi-element beams in the East. And, it was a controversial antenna! Who had ever heard of such a thing in those 1941 days. How come it was there on *my* hill?

Along in the summer, John Hollywood, W2AER of Red Bank, an inveterate ham experimenter, had spoken to me something like this. He had built this huge beam in his back yard using a then highly controversial system of four double-extended Zepps, fed in phase, and backed by eight 5/8th wave reflectors. He had no place to properly mount or to try out this array. Would I mind if he brought it out to W2OEN and installed it on my hilltop where I was already putting out a fine loud signal from a dipole and working out fine over the N.Y.-N.J. basin?

Would I mind? My answer is now history! Now the antenna stood there on the hill, thru the kindness of W2AER, plus the good services of Mr. Ed. Beekman who, with the aid of his field crew, his son, and a tractor had put this unwieldy assembly on top of a 30-foot mast. Mr. B. had even rigged a capstan bar so that the beam could be easily turned by hand. On the ground he placed stakes marked with various geographical points so that the beam could be aimed in the right direction without use of map or compass!

Truly, this array was the not-so-secret weapon at W2OEN! The beam gave me the equivalent of a pair of Sioux Indian noses for sniffing out DX. And, when connected to the 10-watter, the beam roared out the voice (or m.c.w.) from W2OEN over the highly active 2½-meter world then existent in the New Jersey-New York basin and up into New England as far as Boston.

A topographical situation that also aided the beam was W2OEN's location (hand-picked) on a hill (yclept "Kilocycle Hilltop" by W2PP) just northeast of the famous Telegraph Hill and northwest of the village of Middletown. Kilocycle Hilltop was the last hill before the land sloped down to the water on South Jersey's north shore. W2OEN had a wide open shot with the beam for about 300 degrees of rotation. Standing at the base of the mast one could see the upper part of the Empire State Building and the gas tank near Coney Island showed up like a big paint can sitting on the hazy distant shore.

Who needed Pack Monadnock? I had it made at W2OEN, right in my own back yard. Picture this layout; a sensitive receiver, an adequate transmitter, lots of gain in a steerable multi-element beam perched on a high hill overlooking the very heart of the country's greatest VHF activity! This was the setup responsible for many amusing and intrguing QSOs in the summer and fall of 1941 including two-way contacts with *seven* states—before WW 2.

I idly tuned the band. There was the usual Saturday afternoon activity. Al, at W2NKO, was yakking away in his typical Brooklynese and with his usual terrific sock. W2GDG was making his amusing sign-off with his gurgling "Two Gallons of Dry Gin." W3HOH was sounding off on some subject dear to his heart up in Bernardsville. Harold, W2DFV, was telling some one about his mobile rig.

There were the usual squealing whistles as the MRT3s and the DK2s fought their peanut-whistle war down in the canyons of New York and over in the Brooklyn area. On a sensitive receiver and a hot antenna these transceiver units were a constant source of annoyance at W2OEN even if they could barely hear each other. But it was VHF *activity* and *that* was good!

I carefully tuned the band, and hearing no CQ I put out a short call and stood by. Listening on my transmitting frequency I heard a feeble voice calling me. I tuned in the signal and made out the call—"this is W2BBI Maritime Mobile."

I replied and established contact but the MM station was so weak that I could scarcely make out his words. I did learn that the station was on a boat, nearing Sandy Hook. After this information was received, I stood by, went up the hill and swung the capstan bar around until the array was aimed directly at the point of Sandy Hook. When I returned to the receiver I was pleased to hear W2BBI/MM much stronger. He was now giving me a good readable signal!

(Turn to page 28)

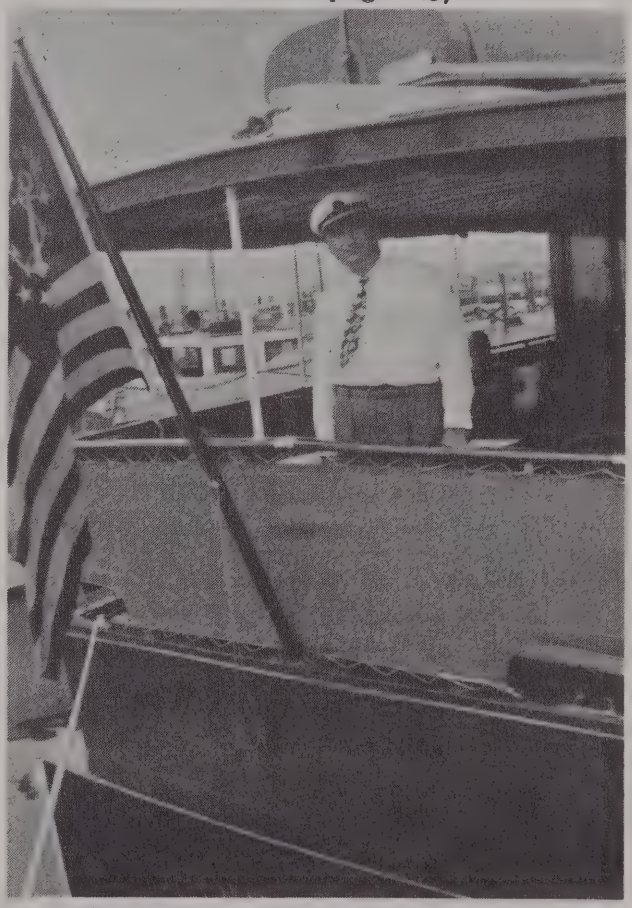

ANOTHER VIEW OF "SHOWBOAT" pictures the aft deck; also shown is yacht's owner, Mr. Ashton M. Tenney.

Making the UPX-4 Work

by MERLIN BERRIE, W5HTZ/AF5HTZ
Box 1273, Wewoka, Oklahoma

(One of the more-intriguing items of surplus gear for the UHF region is the UPX-4 ring amplifier. This device is not the most common item in the world—and a successfully - converted UPX-4 is even rarer than the original item. So far as we know, W5HTZ / AF5HTZ was the first UHFer to make one work properly on 1296. This is how he did it.)

I replaced the 2C51 with a 6U8 so that I could triple and double from 8 Mc to get to 48 Mc; the circuit for the new oscillator is shown on page 24. I am sure that the 2C51 oscillator would work OK with the right kind of overtone crystal (48 Mc) but I had an 8 Mc International FX-1 I wanted to use.

After getting the crystal oscillator and multiplier working I made the following changes (parts numbers are in the manual and on the schematic, next page):

COIL MODIFICATIONS

L101 — three turns removed. You can do this without taking the coil out.

L110 — three turns removed.

L102 — three turns removed.

L103 — two turns removed, one from each end.

L104 — three turns removed, one and a half from each end.

L105 — two turns removed, one from each end.

OTHER CHANGES

Remove R160, R113, and R159. Change R111 to 15,000 ohms and see that its power rating is large enough to handle the grid current which will be flowing. Connect a 47K resistor in series with Z111. Remove R133.

Modify W106 A and B thusly: Remove the flexible wires from the plate lines to the plate connectors. Connect a 1/4 inch flat strip directly from the plate lines (at the spot where L106 hooks on back side) to the plate connectors. Retune C107, C106, C108, and C109. I found that C112 tuned at minimum capacity so I reduced the minimum capacity by connecting a small 10 pF NPO in series with it. Retune C112.

Change the plate and screen voltages thusly:

I used R453 wirewound in series with the low-voltage power supply to reduce plate voltage on the 829B to about 350. I used the correct screen resistor for the right screen voltage for the 829B but don't remember the value (I looked in the handbook). This was a 10-watt WW.

In the 832A circuit, I used R441 flat wirewound in series with the low-voltage supply to reduce the plate voltage to about 300. Again, used the handbook value of screen resistor for proper screen voltage.

I changed the 2C39 cathode resistors thusly: I installed wirewound pots and set them for maximum output without exceeding the grid-current ratings. I haven't measured the values.

Other resistor changes made were: R131 changed to 330 ohm, 2 watts with 10 ohm, 2 watt, in series in order to meter by connecting lead to video selector switch S102. R134 changed to 220 ohm, 2 watts, also in series with 10 ohms. R137 and R138

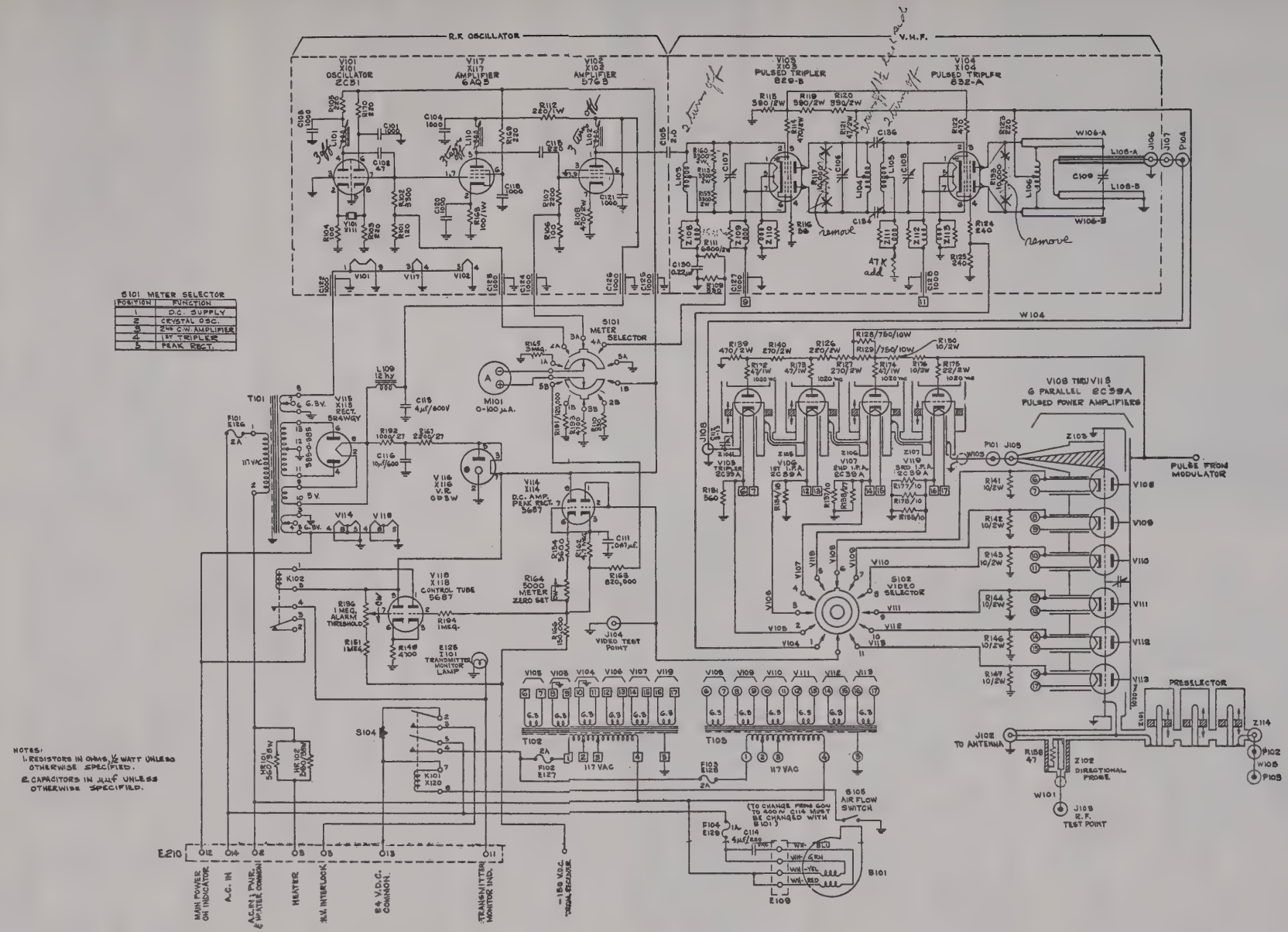

S101 METER SELECTOR	
POSITION	FUNCTION
1	D.C. SUPPLY
2	CRYSTAL OSC.
3	2nd C.W. AMPLIFIER
4	1st TRIPLER
5	PEAK RECT.

Tell your favorite manufacturer about VHF 23

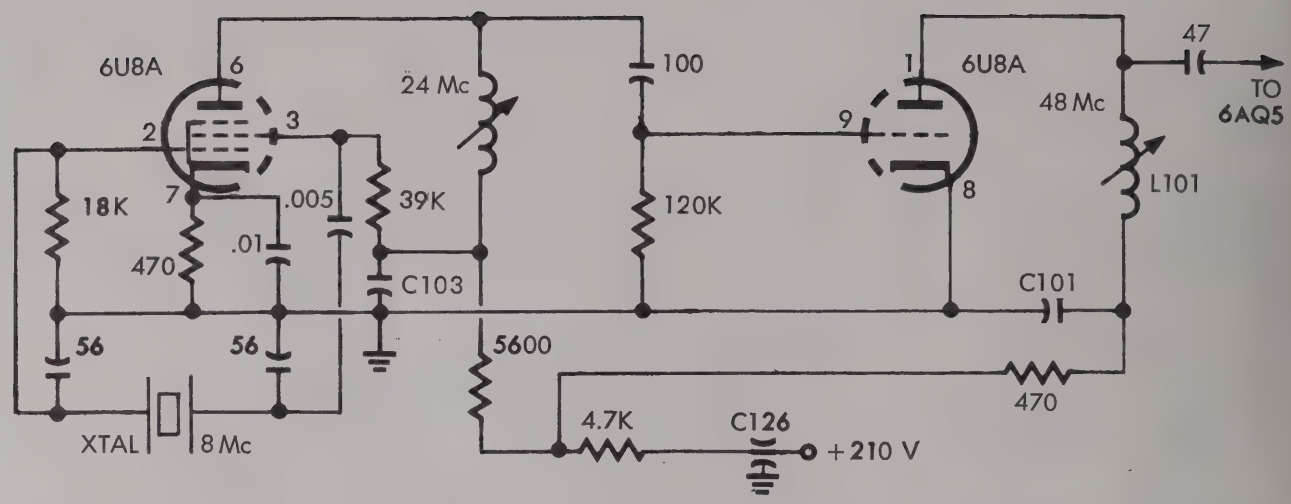

changed to 330 ohms 2 watts in series with 10 ohms. R135, R177, and R178 changed to 390 ohms in series with 10 ohms (single 390-ohm unit). R141, R142, R143, R144, R146, and R147 each replaced with 150 ohm resistors, also in series with 10 ohms, already there.

The 10-ohm resistors are used in order to meter. You may have to experiment a little here to get the meter to read right. When you get it right the top scale of the meter will read in MA.

I cut loose R166 and connected a 33K 1/2-watt resistor between the green wire going to S102 (did go to pin 1 and 2 of 5687 peak rectifier) and the orange and black tracer wire going to S101.

In my case this caused the meter to read approximately correct cathode current in MA when in peak rectifier position. Other wires from S102 were connected to correct 10-ohm resistors in cathodes of 2C39s, where they joined larger cathode resistors.

All 2C39 plates were connected to the low-voltage line except the final and the driver for the final. These two were connected to high voltage, approximately 1,000 volts. I changed these to ceramic tubes. The cathode resistors in the final may have to be adjusted to balance the tubes so they will all draw the same amount of current. Mine read between 100 and 125 MA.

I removed the gang tuning of the 2C39s because tuning was erratic. I tuned each one separately with a screw-and-spring arrangement, and the driver with the panel knob.

Use a dummy or an actual antenna; don't test too much unloaded. I ruined a tube this way (it shorted, grid to plate). This will also take out a meter if you have one in the plate circuit (I did). I also lost a meter to RF even though it was bypassed. I assume there must be a lot of RF in this particular lead. I intend to experiment more here.

I have not used the receiver as I have another converter for 1296. This receiver should work OK as a converter with 30 Mc output. The crystal and multiplier string would have to be changed.

POWER SUPPLY

I removed all 829Bs and associated transformers. Removed plate transformer T407 and replaced it with a 600-0-600 volt high-current job provided by W5HXK. Removed choke L404 and substituted high-current choke, around 700 MA or so. Replaced large filter capacitors with physically smaller ones.

I used the existing bleeders and M401. Used one bleeder on HV and one on LV supply. Take off at center tap of 600-0-600 transformer with a filter choke and capacitor for the LV supply.

CAVITIES

To raise the frequency of the 2C39 plate cavities, I soldered a piece of 1-7/16 inch ID brass pipe inside the plate cavity. This

(Turn to page 35)

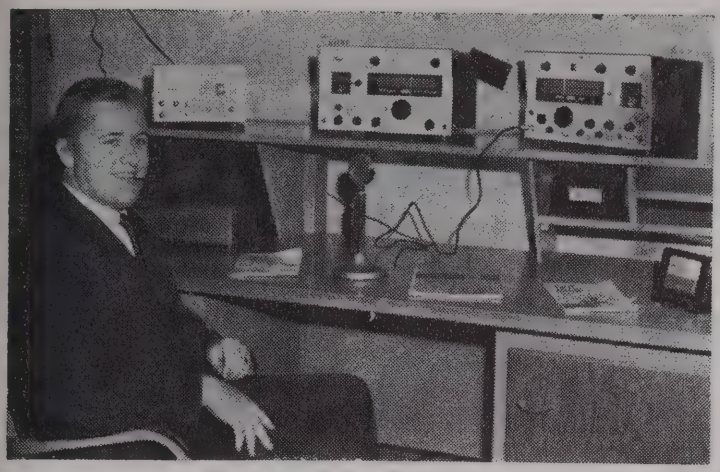

Best Deal on CLEGG—vhf

Florida's BIG 6 and 2 meter signals and fantastic trade in deals come to you from Phil LaMarche, W9DVM/4 manager of our new Orlando Florida Store!

Here is a picture of our man in Florida . . . Phil LaMarche, W9DVM/4. The picture shows Phil with the Clegg "Interceptor" Receiver and the terrific "Zeus" Transmitter . . . at the demonstration desk of Amateur Electronic Supply's new Orlando, Florida store, 23 Azalea Park Shopping Center. Telephone number is 277-8231. Phil is all set up to meet and work with all our Florida ham friends. Come in and personally get acquainted with the big signals that Clegg VHF gear delivers. Phil says, "In addition to the big signal I get from the Zeus Transmitter, I find Clegg gear is remarkably trouble free . . . thanks to the good design and the care they take in production. The only trouble I have with Clegg gear is trying to keep enough of it in stock! If you can't come in, order by mail directly from our Milwaukee store where we're set up to handle all our mail orders and ham correspondence.

$5.00 DOWN ...UP TO 3 YEARS TO PAY

. . . DELIVERS ANY NEW CLEGG VHF GEAR TO YOU!

. . . and look at these low monthly payments after just a $5 down payment:

	Amateur Net Price	Payments per month for 1 year	2 years	3 years
Clegg Zeus	$695.00	$63.25	$34.50	$24.91
Clegg Interceptor	473.00	42.83	23.33	17.91
Clegg 99'er Transceiver	159.00	14.11	7.70	5.56
THOR IV, 6 meter, 50 Watt Transceiver Tentative Price	350.00	31.62	17.25	12.45
VENUS, 6 meter, SSB Rig, Tentative Price	425.00	38.50	21.00	15.16

STAY ON THE AIR PLAN!

No need to go off the air. Keep the gear you're trading in until your New Clegg equipment arrives!

CREDIT AND ORDERING INFORMATION . . .

See our special ad on page 108. The information in this ad will help us ship your order at once. Fill out complete and enclose with your $5 deposit.

AMATEUR ELECTRONIC SUPPLY

THREE STORES TO SERVE YOU

Please send mail orders to Milwaukee Store

3832 West Lisbon Ave., Milwaukee 8, Wis. • PHONE WEST 3-3262

CHICAGO 31, ILL.
6450 Milwaukee Ave.,
PHONE RO 3-1030

ORLANDO, FLORIDA
23 Azalea Park
Shopping Center

Amateur Electronic Supply—Mail Order Dept. VHF
3832 W. Lisbon Ave., Milwaukee 8, Wisc.

Ship me .....

I enclose .....: I will pay the balance in

☐ 1 year ☐ 2 years ☐ 3 years

If new account—enclose credit information—see page 108 for details

I want to buy ..... and want to trade

..... What's your deal?

Name .....

Address .....

City ..... State .....

Send reconditioned equipment bulletin

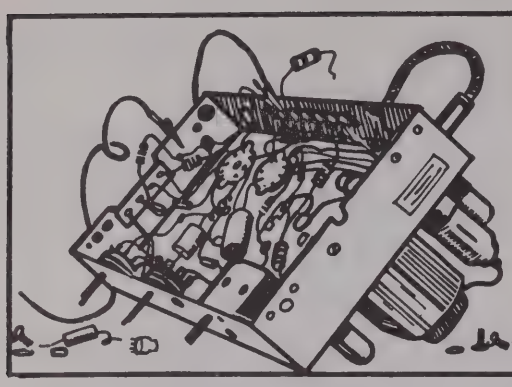

THE CONSTRUCTION BOX

Parasitic Suppressors

Ever had the resistor in one of those standard "5 turns of No. 14 on a 50-ohm resistor" parasitic suppressors burn up? We've lost several here, and three of our friends have had similar trouble.

A rudimentary look at the standard suppressor shows that at VHF, the inductance is such that a very real amount of power will be lost in the resistor.

A suppressor that has been in use here (not original — we saw it somewhere — but it really deserves spreading around) is a capacitor-resistor parallel combination across about an inch of the plate strap lead to the coil. It looks something like this:

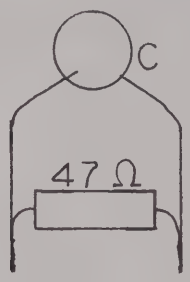

As one would expect, the spacing on the strap (since it has low inductance) is not very critical, but the capacitance and *its* lead length are. They form the resonant circuit which the resistor loads. We ran a couple of tests with 47 and 100 pF capacitors:

TOTAL LEAD LENGTH	RESONANT FREQUENCY 100 pF	47 pF
1¾″	68 Mc	—
1½″	—	100 Mc
1¼″	86 Mc	108 Mc
1″	—	120 Mc
¾″	102 Mc	141 Mc
⅝″	115 Mc	155 Mc
½″	138 Mc	170 Mc

One of these (at 135 Mc) is in use here with the homebrew 6146 and the paint has stayed on a 1-watt resistor for 2 months.

This gimmick might also pay off used as a harmonic trap in the plate lead. We haven't had to try it, but it seems reasonable.

—W4VRV

Simple Drill Stop

Have you ever tried to drill a hole in a chassis that already had parts mounted in it? I'll bet you drilled right through some of the parts when the bit broke through. Here's an easy way to save your temper and reduce the load on your pocketbook.

Obtain a length of copper tubing (any other kind will work equally well) that is just a quarter-inch shorter than your bit when it is in the drill. Slip this over the bit. and you have an automatic stop for your drill. This will work on electric and hand drills equally well.

—K9DNW/7

Grid-Dipper Hints

When constructing a grid-dip meter from kit or from scratch, many hams overlook several facts that could cause them much grief when using the meter at VHF.

The most important thing to change in any kit which uses a cheap wafer type socket for the coils is the socket itself. Discard that wafer and replace it with a good phenolic or porcelain socket. At VHF, the cheap sockets are prone to cause double dips and false indications due to high leakage and poor contact.

In some cases, the double dip may still be present although a good socket is used. A cure which works in many cases is to connect an additional pigtail lead from the front of the rotor on the tuning capacitor to ground.

—WA6ZEM

Cutting Air-Wound Coils

Here's an easy way to cut Airdux or B&W miniature coils to size with a minimum of mechanical distortion. Slip the coil over a suitable sized metal rod which is fastened in the bench vise. Grind up a small chisel out of a piece of 3/16 or 1/4 inch tool steel, making the chisel blade slightly less than 1/16 inch wide (if tool steel isn't handy in your shack, use the tang end of a three-cornered file. However, be sure to keep a handle on the file afterward to avoid cutting yourself on the homebrew chisel).

Hold the chisel between thumb and forefinger and place the blade on the coil wire where you want to cut it. Hit chisel with hammer; wire will sever as neatly as if you used sidecutters. Unwind one turn of wire and use sidecutters to clip plastic strips.

—K5KLU

Mounting Power Resistors

A fast and convenient method of mounting power resistors of the hollow Ohmite type, especially for vertical mounting on top of the chassis, is to use Molly Fasteners (trade name) of the appropriate diameter. Collapse or expand the fastener inside the body of the resistor, and presto, one easy hole mounting.

—K5YPH

2C39 Sockets

If you want to make use of your surplus 2C39's and can't find sockets, try using fuse clips mounted on insulator material to accept the tube, and a large size banana plug in the heater "hole."

—WB6AOW

More Tips Wanted

We still need more items for this department. Each one printed gets you a 12-month extension of your present subscription to VHF. Send 'em in however you like, but send them.

Especially needed are *short* items such as many of those appearing this month. They get just as much as the long ones — and most people seem to do the longer ones. But the shorter the item, the more of them we can get in each issue!

"LITTLE GEM"

2 METER NUVISTOR CONVERTER

(See article in Dec. VHF Horizons)

This unit has amazing sensitivity-selectivity and I.F. output. Very low noise factor. Bandpass 2Mc. Will easily mount inside your receiver. 6CW4 R.F.-6X8 osc. mixer. I.F.'s—6MC and 50MC 2½" x 4" P.C. less tubes and xtal — Only $7.50 p.p.

4 nuvistor 6 meter converter — an I.F. — $8.50 p.p. 6 meter — 6CW4 — Pre-amp—$5.50 — 2 meter — $4.50.

Gem ELECTRONICS

P.O. BOX 203 TREMOUNT CITY, OHIO

VHF CRYSTAL HEADQUARTERS

Crystals for Converters, Receivers, Transmitters, etc. For VHF - UHF — overtone type in HC-6/U hermetically sealed holders only $1.05 each postpaid USA. FULLY GUARANTEED.

10000.000, 10666.667, 12000.000, 11707.41, 15000.000, 15.7775, 20.53333, 22.15556, 26.12083, 26.16250, 26.66667, 27.1200, 27.78333, 38.88889, 31.1111, 32.2222, 34.000, 34.4444, 35.000, 35.5555, 36.6667, 37.000, 37.5000, 37.77770, 37.40741, 38.14815, 40.000, 40.11110, 40.33333, 40.4444, 40.66667, 40.77780, 40.925926, 40.962963, 41.000, 42.3333, 42.59259, 42.96296, 44.3000, 45.1000, 45.3000, 46.1000, 46.3000, 47.1000, 47.3000, 47.5000, 47.9000, 48.1000, 48.3000.

QUAKER CRYSTAL GRINDING AND ETCHING KITS

KIT NO. 1

These kits contain following materials.
12—Crystals in misc. holders
6—Assorted Crystal Blanks
1—Pkg. Ammonium Bifluoride
1—Packet Grinding Compound
2—Plastic Containers
2—Wooden Crystal Blank Holders
Instructions: $3.95 Postpaid, USA

KIT NO. 2

20—Crystals in Assorted Holders
12—Assorted Crystal Blanks
1—Large Package Ammonium Bifluoride
1—Large Packet Grinding Compound
3—Plastic Containers
4—Wooden Crystal Blank Holders
Instructions: $7.50 Postpaid, USA

KIT NO. 3

35—Crystals in Misc. Holders
15—Assorted Crystal Blanks
1—Extra Large Packet age Ammonium Bifluoride
1—Extra Large Packet Grinding Compound
5—Plastic Containers
6—Wooden Crystal Blank Holders
Instructions: $12.50 Postpaid, USA

Write for 32 page crystal catalogue. Hundreds of VHF Crystals in stock!
Enclose 25 cents to cover postage, etc.

QUAKER ELECTRONICS
P.O. Box 56V — Mountain Top, Penn.

QSO Showboat . . . continued from page 21

The QSO progressed. I learned that W2BBI/MM was a battery-powered transceiver aboard the yacht *SHOWBOAT* and that the owner, Mr. Ashton M. Tenney, had brought along a group of friends for a stag cruising party while the yacht was being transferred from her home port of New Rochelle, to Georgetown, Maryland. There the yacht would be berthed during the winter season in the mild waters of the Bay and the yacht's guests would return home by land.

Operator George D. Campbell, W2BBI, told me that a mishap had occurred earlier in the day. The yacht had departed New Rochelle early in the morning. While passing thru Hell Gate in the East River, the yacht struck a submerged log! The blow had damaged both propellers, their shafts and had also harmed the couplings to the twin Diesel engines.

W2BBI said that the yacht's engineer had hove to and made a brief inspection but that it had not revealed the true conditions as the vibration in the propulsion system had worsened. The yacht had proceeded toward the Jersey shore but because the weather was getting heavy in the Atlantic, the party decided to anchor just inside protected Sandy Hook Bay for the night.

By now conditions were excellent for two-way contact as the yacht drew closer to W2OEN. A message was taken to be relayed by telephone to New Rochelle. A standby was made while I ran over to the Beekman Farm, explained the situation and used their telephone to inform the New Rochelle folks that the yacht was safe and where it was headed for the night.

W2BBI suggested that it might be fun to continue the contact as far as possible on the next day (Sunday) and since the yacht would be starting out early in the morning, and going *away* from W2OEN with every turn of her screws, it would be a good test ditions over a path not previously bridged of 2½-meter transmitting and receiving con- by W2OEN. I was glad to have the opportunity to check the performance of the big beam over this terrain and the southerly heading. So we arranged a schedule. I was to pickup W2BBI/MM the next morning while they were anchored in the Bay and we would keep a running QSO as long as possible.

W2BBI signed off and closed down and I resumed my normal operating activities for the evening. No further attempt was made to contact the yacht that night.

An interesting sidelight was the report by W2BBI/MM that he could not hear readable signals from stations other than W2OEN. Altho there were weak stations coming thru, he was unable to raise anyone but me. A strange phenomena but one that was to be fortunate for both W2BBI/MM and the yacht's party. Other stations, sans a powerful beam and a good location were just not able to pick up the weak transceiver signal. Checks later indicated that no one else heard the yacht that afternoon or the next day!

(to be concluded next month)

Scatter . . . continued from page 3

around for quite a while, and has a reputation which speaks for itself. Those who attack it run headlong into this reputation — and the result more often than not is a very sore head. And who likes a sorehead?

Now as I said earlier, the League isn't perfect. I have my own small list of gripes. I'm not going to list them here. I've already told them to Ray Bryan, W5UYQ, the West Gulf vice-director, and I'm satisfied that they are being taken care of (in fact, I found out that at least one ARRL official privately shared some of them). It may take a few months or even a few years, but none of them are really that serious.

Some of the things that made many VHF ops mad appear to be on the way toward being changed — such as official station appointments for Techs. And if you've been reading QST carefully for the past several months, you will have noted a most welcome upsurge in VHF/UHF coverage.

I like this. I'm in favor of ham radio in the VHF/UHF region — and while, as an editor, I'd like to have all the advances appear first in these pages, on the other hand as a ham I'm most happy to see the League taking off in this region too. The more the merrier.

So we come full circle and get back to the original point. Cancel all your other subscriptions if you like, but please don't quit the ARRL. We all need the League — and it needs all of us.

What do you think? **— K5JKX**

Vital Happenings & Facts

OPERATING AND DX NEWS

The extraordinary results obtained by two meter meteor scatter (or shower) enthusiasts during the past autumn months is worthy of more than passing interest.

Time was that even the best equipped operators and stations would not venture into the world of two meter meteors except during one the top two or three showers of the year. Usually this meant the Perseids shower in August.

This past fall, however, some of the more enthusiastic of the MS crew (i.e. K7HKD, W4WNH, W8PT, W4TLC, W7JRG, W5-PZ and numerous others) have stayed with the pings and pangs straight through. Every minor and even every minor-minor shower has been exploited to some extent. In most cases this fall was the first time these so-called minor showers have really been given the old college try.

The results have been surprising, to say the least. The number of completed two meter QSO's this past fall probably stacks up better than the number of meteor QSO's completed during the August Perseids.

Then again the results may **not** be so surprising. After all, if we hadn't tried these so-called minor showers in the past, how is it we could stand around with shuffling feet and proclaim "it can't be done!"?

It has been the story of amateur radio from the very beginning that all it usually took for someone to prove that 'it could be done' was for someone to say 'it can't be done.'

Which brings us to 220 meteor scatter. Or 432 moon bounce. Or two meter sporadic E. Or . . , or . . ., or . . . .

Have you **tried** anything 'impossible' lately?

Leading off the 'what DX' department this month is the news that the 432 Mc power limit has been lifted clear off for most of us (see January issue, VHF Horizons). Now watch those copper strap parasitic suppressors come off the plate current meters!

432 MC will find W8PT active on 432.-098 with 500 watts. Jack's Michigan QTH ought to provoke a few of the boys into spinning their beams that way. He skeds K9UIF at 2100 EST these days. Take a listen.

K8AXU, Al, reports he is now spotted on 432.410 from his new 1,000 foot Sisterville, West Virginia QTH. His rig is a 5894 final winding 50 watts and the beam a 13 element yagi. Al reports what may be a new inside continental USA 432 record. He and Rex, W5RCI, worked one another on 144, 220 and 432 one evening in August with signals 10 over on 144, S5 on 220 and S1 on 432 both ways. The distance is 650 miles, and sounds like it **should be** a new inside continental limits record.

John White, W5UKQ is now /5 in Baton Rouge, temporarily off the air after a move. John, a Research Consultant for VHF, talks of his new 432 rig which will sport a 6181 coaxial tetrode in A1 emission only. With this kind of final, few of us should go begging for Louisiana on 432! He will keep us informed.

Vic, W9JFP, accepted the news that the 432 power limit is off by unveiling a twin lash up he and Dave, K9DOE, in Forest Lake Forest, Illinois are putting together. Vic, in Milwaukee, and Dave will soon be cranking the watts from 4CX100's mounted in coaxial tanks which (along with the 416B converter) will be mounted 130 feet in the air just under the rotor that will twist a 40 foot long 54 element yagi's on 432 Mc! Wow. Shades of Sam Harris. Their frequency (ies) will be 432.025 with beams south at 2200 CST daily.

OK . . . so how about the rest of the 432 crew? Who is doing what to win the race for 432 moon bounce honors?

50 Mc DX was popping through much of November and December. With the exception of the first ten days of December, and a flurry around the last few days, November was as good as December in many southern quarters, to the surprise of all.

From out in La Mesa, California, W6IEY (Dick) reports on Es openings on 1 December (San Antonio, Dallas, El Paso heard

or worked), 3 December (Texas area heard again), 11 December band open to Texas panhandle, Colorado, Kansas and 8 land), 14 December (New Mexico and Colorado heard, Oregon and Washington worked), and 16 December (Kansas stations worked in and around San Diego).

W4OAB and W4URS are seeking long ground-wave skeds with Kentucky, Georgia, West Virginia, Tennessee, etc., out 150 miles or more. Both lads are located in Charlotte, North Carolina and would appreciate a note from you if able to accomodate.

From Holbrook, Massachussetts, K1MUC reports on openings down into the Caribbean area on 50 mc. Wayne notes that on November 30th he heard a near-local calling YV1DS at 1600 EST. Later on that same day at 1900 EST K1JMO was able to work VP7CX in the Bahama Islands. VP7CX's frequency was 'just below 50.05' according to Wayne, and he was working W1, 2, 3, 4 and talked of having worked 8 land earlier. On December 4 the band opened from W1 to W4, and again on the 5th 4's rolled in from 1600-2000 EST. On December 6 Wayne heard our friend the unidentified unmodulated carrier on 50.00 megacycles, peaking with a Carribbean origin. (Fidel's playing again.)

Dick Milligan, W5RCK/Ø in Bellevue, Nebraska tells of the activities in his area on six and up. Dick's on six with 20 watts input, using an Ameco converter into an HQ-150 (5 element Hy-Gain up 40 feet). He reports an opening into Florida, Alabama and Mississippi at 1600 CST on 20 December. And, 50.4 megacycles is the monitoring frequency in the Omaha area, in case you are looking for mobile contacts there.

Another portable station, K9DNW/7 in Pinedale, Wyoming is still working on his 2E26 final. With lack of sufficient drive, he's going to a 6CL6 buffer amp. W7VHS is also active in Pinedale using a Knight R-55 and T-60 with a 3 element homebrew beam.

Wanted! Schedules with Kalamazoo, Michigan, says WA9AHZ in Chicago. The Chicago lad wants to phone patch some traffic into the Michigan city. SSB only. Anyone able to help?

Ed Lankford, W4HHY, gives us the dope on VP7CX in the Bahamas. The Bahama lad goes by the moniker of Harold, is located on San Salvador in the Bahamas. Some report he's on 50.240 megacycles, in addition to the 50.049 frequency reported earlier here. He is accepting QSL's in care of a W9???. Anyone know the rest?

Dallas area 50 mc buffs should investigate the 'Cowtown 6 Meter DX Club.' Someone tells us the club has a system of prizes for working DX. This sounds like fun. Jim Palmer, K5TKR, has the story at CR 4-7814, if you are in the Dallas area.

From Seattle, Washington area George Mitchell, W7ZQX advises us of six meter doings from his area. Sporadic E reared its beautiful head with an opening into California between 2100 and 2200 PST on 4 December. George also reports he continues his weekend scatter work with W6FZA and W6NLZ, on CW, with signals running 239 to 449 most mornings. SSB scatter was tried with W6FZA for awhile and continues with good results. New skeds with WØENC in Rapid City, South Dakota are also working out well according to George. Quoting from a letter of 2 December, Bob of Rapid City wrote "Dear George, was just amazed at reception of your SSB signal this AM. Copied calls many times R3 S8 and towards the end it was R3 S5. Didn't hear much CW, one short burst at 1028 when I copied calls . . ."

Note to WØENC: How about a sked with W5KHT. This is a north-south path too!

Back out in California, Denny, K6UMM, in Canoga Park reports on an unusually strong Es opening up into Washington on the 4th. Denny also notes Texas was copied on Es every night for a week from 1 December on, 1700-1800 PST.

Jeff, K5VHU, is on 50 mc teletype keeping skeds with W5EAH, nightly at 2100 CST on 50.45 mc. K5VHU is located in Seminole, Oklahoma and W5EAH is in Cushing, Oklahoma. Any joiners?

Remember W6RLB of Bay Area (California) 50 mc scatter fame? Guy Black is now K1QJT in Belmont, Massachusetts. How times change. Whatcha doing Guy?

K9DTB, Villa Park, Illinois continues his efforts on 50 CW and SSB. He's on 50.110 on SSB and 50.030 on CW. On November 13th he worked two-way SSB K8GND in Michigan, W9CIU in Wisconsin. On November 17th he worked W9HGE Wisconsin. Heard locally on six SSB in Villa Park are K9ZOO, K9HMB, K9VLD, WA9ERC, W9CEV, WA9AHZ, W9BON, K9BBN and K9GIS.

From Oklahoma, W5KHT caught Pappy, W5UB, in San Antonio over a short 400 mile Es path on 1 December at 1900 CST, and worked back-scatter W5SFW from

SCATTER SPECIALIST Ed Pick, W0BBM, shows his newest tilt assembly (made from wreckage of a Rohn foldover tower) during a visit to VHF's home office. Halo proves Ed keeps in touch with VHF operation while traveling; his home location is Imperial, Missouri.

Amarillo at 1944 the same date. Back scatter signals peaked out of the southeast and Phil reported hearing Louisiana and south Texas stations working west to California and east to Florida at the same time. The VP7 was on that evening also, but not heard in the mid-west apparently.

W5KHT also caught K7ICW in Las Vegas on A1 on the 11th and 15th of December, both evenings around 2230 CST.

220 MC news is in bits and pieces this month. K6UMM in Canoga Park is building up gear for this band. Under construction is a Nuvistor converter into an A2 from Collins, a pair of 4X250B's and a set of four 29 element Telrex yagis in a quad for a total of 116 elements! Polarization is horizontal, frequency is 221.4 to 221.6 and skeds are sought east and north.

W4OAB, Brian, North Carolina type, is on 220 with a 6360 rig and Nuvistor converter. The antenna is an 11 element yagi.

Ben Hall, W9OVL, our faithful 220 reporter from up Chicago way tells us four new 220 stations on now in his baliwick. Active new are K9DNG, K9WSZ, K9OOK and W9QDO. K9DNG built up the 220 rig as shown in the VHF Handbook but had no signal at 220! So he pulled out the last three stages and substituted UHF ceramic sockets. Now he has a FB signal.

WØYZV in Omaha heard W9OVL S9 on 220 phone for 30 minutes recently. OVL runs a 10/10 yagi system driven with 125 watts.

Slowly—but surely—1¼ meters is shaping up. Now for some concentrated effort from all hands. How about a series of 220 weekend DX Tests?

K8AXU, A1, sits on 220.105 these days. He runs 120 watts to a homebrew 5894 final with a 10/10 antenna system. He's in Sisterville, West Virginia.

144 MC news is almost exclusively news of meteor scatter schedules and contacts through November and December.

Shelby Ennis, W4WNH, from Louisville, Kentucky reports on the Leonids Meteor Shower November 16 through the 19th.

Out of the shower came a contact with K7HKD in Wyoming. Skeds held with W7LVU, K7IDD and K7HKD on the 16th were without luck. The 17th was a repeat although one weak burst was heard from W4TLC. This is over a 300 mile path that defys tropo activity because of the terrain. Quoting Shelby, (November 17th) "Tuning band, hit signal near .120 about 0706. During next minute received beautiful burst from K7HKD calling VE3DIR. However K7HKD was on 144.119 by my calibration instead of his usual freq of .124. Several more strong pings. Called Harold landline to inform him of his frequency and suddenly heard VE3DIR coming clear thru the telephone. At the end of the calling period

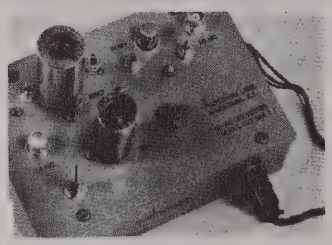

NEW!

PIONEERING CONVERTER

LO NOISE (2.5 db) OVERLOAD PRICE

HI GAIN (25 db) PERFORMANCE QUALITY

MODEL C61 6 METER CONVERTER
INPUT: 50-54 MC.
OUTPUT: 14-18 MC. (other I.F.s available at $1.00 additional)
NOISE FIGURE: 2.5 db typical
GAIN: 25-35 db. (10 db ADJUSTMENT TO INSURE MATCH TO RCVR.)
IMPEDANCE: 50 ohms
CONNECTORS: FEMALE BNC TYPE.
POWER REQ.: 150 vdc at 30 ma. 6.3 vac at 1a.
SIZE: 4" x 6" x 2".
TUBE LINE-UP: 6CW4, G.G.R.F. amp; 6BQ7, mixer-oscillator; 6C4, I.F. amp. PRICE: $28.50
MATCHING POWER SUPPLY MODEL PS4: $9.75.
OTHER AMPLIDYNE LO NOISE, HI PERFORMANCE PRODUCTS.
MODEL C23 2 METER CONVERTER: $34.25.
MODEL P62 6 METER GROUNDED GRID PRE-AMP $9.75.
MODEL P25 2 METER GROUNDED GRID PRE-AMP $9.75.

ALL AMPLIDYNE PRODUCTS ARE GUARANTEED FOR TWO YEARS AGAINST COMPONENT FAILURE AND ONE YEAR ON TUBES.

ORDER TODAY FROM

AMPLIDYNE LABS BOX 673
KINGS PARK LI NY

could hear K7HKD (on my own receiver) as he went back to Tony. Hope they made it."

W4WNH made it with K7HKD on a sked from 0900 to 0922.

A sked with W4TLC on the 18th produced a single ping with both stations using an Alabama heading. A sked with K1LSY from 0600-0700 on the 18th produced 50 pings and 3 bursts, no QSO.

WB6AOW, Santa Cruz Island, California, reports on 144 sideband DX and CW DX. On December 5th a station in Encino was trying to work east into Arizona and the Arizona station's CW signal was heard on the island. Back on November 6th San Francisco Bay Area stations were running S6 on the island. On the 7th W6FZA was heard on SSB from Porterville and San Luis Obispo stations were copied on AM. Sounds as tropo has been breaking along the coast a bit.

K8IFL writes of an award that two meter enthusiasts along the Great Lakes might keep in mind. This is the WUFO-2 Certificate, which you earn by working 5 of the Ironwood, Michigan gang on two meters. Dreamed up by W8LIM, K8IFL is now the custodian of the award. You can look for W9AJU, W9VFO, W9BCY, W9HHJ, W9ERT, K8IFL, K8KYM, K8JWE and WN8EHM for contacts to count towards the certificate.

K1RTS, Waterbury, Connecticut, reports on a November 28th tropo opening over New England. He's looking for two meter CW contacts on Sunday mornings. All directions.

From Bowling Green, Missouri, Ed Porter, WØLFE writes of two meter DX activity in his area. Ed says he spends all of his time on two meters, and hasn't operated six because of being located in a Fringe area for channel 2. Power on two ends up with a 6N2 Thunderbolt driven on either AM or SSB. The SB generator is an HT-37. He also hangs in there on CW on aurora (what's that? Ed). The antenna system at WØLFE is a pair of slots, 8 over 8, 65 feet up. Activity in his area congregates on 144.350 on SSB. K9AAJ, W9KQX, K9-VWX, K9KYZ, W9KZD, W9BGM, K9-VGM are among those active on SSB. A few also work around 145.050 to 144.100. Ed's frequency on aurora or meteor showers (he's been working with W7JRG and K7HKD of late) is 144.246.

W8PT takes us to task for our typographical errors, as well as informing us of

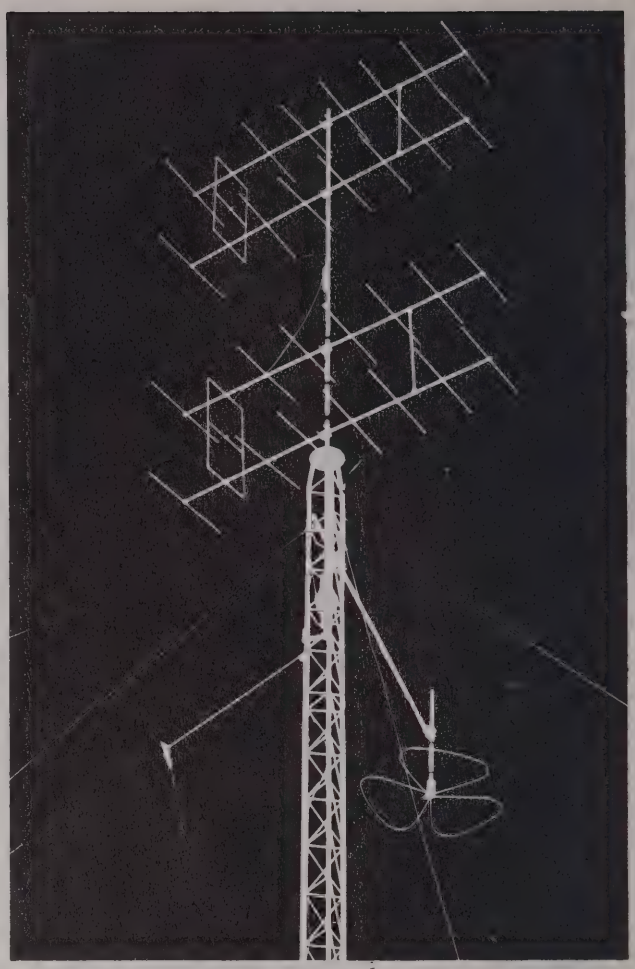

ANTENNA FARM AT NIGHT shows array of arrays at WØLFE, Bowling Green, Missouri. Operator Ed Porter feeds these 2-meter monsters with a Thunderbolt, driven by "either a 6N2, a Communicator 3½, or a HT37 thru a converter." Credit for the unusual shot goes to Joe Bryant, photographer for the Bowling Green Times.

the latest shower results. We've tried every conceivable method of communicating with the type-setter, Jack, and after 7 months have decided that he doesn't speak English. In desperation we have gone to another outfit to set our type. Here's hoping!

On the more serious side, Jack writes ". . . Now for the story of the Geminids meteor shower as seen from the Michigan end. Skeds were set up with K4IXC, WØIUF, K7IDD and VE6HO. Here's how it went: Monday night — called VE6HO, K7IDD and WØIUF on sked. Got one weak ping from WØIUF, nothing from others. QRT at 0300. Tuesday — snow and more snow. Wind 45 mph, with high gusts. Temperature a plus 3, snow 34 inches deep and getting deeper. Gears stripped in rotator, couldn't keep skeds. Wednesday morning — Beam stuck southeast. Worked K4IXC (Florida) on sked even tho beam was 10 degrees off of him. Tried everything to turn beam except to climb tower in zero degree temperatures and high winds. Listened to K4IXC pound in while he kept

other skeds. Could have worked him a dozen times . . . what a signal! Thursday—got home from work and looked up at beam. Holy smoley, it's pointing west. Wind? Prayers? Anyway, worked WØIUF in 18 minutes on our 0200 sked. Friday — Weather warm — 22 degrees — climbed tower and loosened bolts, putting beam on VE6HO. Spent most of night listening on his frequency . . . sked ran from 0000 to 0100 and didn't miss a call on my 30 seconds. Heard nothing.

"Sunday — Weather warm — 28 degrees — Folded tower over and replaced rotor which is quite a job, but it got done OK thru the invaluable aid of my wife. So ends the story. How do you suppose the beam got around to the west and right on WØIUF?"

You must live right Jack.

Oh yes, Jack reports an aurora session December 17th from W1, W2, W3, W8, W9 and WØ. Now we know you live right Jack. Sob.

From out in California staffer John Chambers, W6NLZ, reports on a continuing series of two meter schedules and contacts over, around and through the usually impassable terrain features of the California mid-lands.

On November 2 John worked W6GDO in Sacramento on SSB over a little old 360 mile path that defys description. On November 4th, W7JU and K7ICW from Las Vegas were worked on two meters over an equally tough path. W7JU is now on two meters Sunday mornings 0800 PST with very reliable two meter CW signals, says John.

A tropo opening of sorts into central California the evening of the 4th brought in signals from W6GDO, Sacramento, W6NTV, Turlock, W6MSG in Paso Robles. On November 10th John worked W7LEE in Parker, Arizona RST 579 on cw.

Southern staffer John White, W5UKQ, Baton Rouge, Louisiana is putting the finishing touches on his new 'whopper' rig which he says will have loads of stability and suds. Meteor shower frequency will be 144.018 and other DX work will be done around the 144.150 hang out of W5FYZ, W4TLV and others. A new 80 foot tower has been ordered and the old 22 element array will go up on it until a new quad array of yagis from Telrex is installed. John is all enthused over meteor showers since the Perseids and is looking for skeds all over the place. Ok you fellows who need Louisiana on two meter — the line forms to the right.

Remember — fill out and return your DRP cards in this month's issue! Let's have a basket full of information for March.

432 Mc . . . from page 7

L6 — 3⅓ turns No. 20 tinned on Miller 4300.
L7 — 1 turn hookup wire at cold end of L8.
C1, C2 — 4pF piston trimmer (Centralab 829-4).
C3 — 68 pF mica.
C4 — not used in prototype; tunes to XTAL frequency with L5 if necessary.
C5 — 10 pF plastic piston trimmer.
C8 — 6 pF piston trimmer (Centralab 829-6).
FT1, FT2 — 1000 pF feed-thru capacitors Centralab MFT-1000 or similar (6 required).
RFC — see text.
T1 — 125 VAC, 50 MA; 6.3 VAC, 2A (Stancor PA8421).

Citizen Band Class "D" Crystals

CITIZEN BAND CLASS "D" CRYSTALS
3rd overtone — .005% tolerance — to meet all FCC requirements. Hermetically sealed HC6/U holders. ½" pin spacing. .050 pins. (Add 15c per crystal for .093 pins). **$2.95 EACH**

All 23 megacycle frequencies in stock: 26.965, 26.975, 26.985, 27.005, 27.015, 27.025, 27.035, 27.055, 27.065, 27.075, 27.085, 27.105, 27.115, 27.125, 27.135, 27.155, 27.165, 27.175, 27.185, 27.205, 27.215, 27.255.
Matched crystal sets for ALL CB units (Specify equipment make and model numbers) ..... $5.90 per set

RADIO CONTROL CRYSTALS
in HC6/U HOLDERS—SIX FREQUENCIES
In stock for immediate delivery (frequencies listed in megacycles); tolerance .005%. ½" pin spacing. .050 pin diameter. (.093 pins available, add 15¢ per crystal.) Specify frequency desired.
26.995, 27.045, 27.095, 27.145, 27.195, 27.255..... **$2.95 EACH**
(add 5¢ per crystal for postage-handling)

ENGINEERING SAMPLES and small quantities for prototypes now made at either Chicago or Fort Myers plants with 24 hour service. IN CHICAGO, PHONE GLadstone 3-3555

IF YOUR PARTS DEALER DOESN'T STOCK Texas Crystals, order direct and send us his name.

RUSH YOUR ORDER NOW TO

TEXAS CRYSTALS
Div. of Whitehall Electronics Corp. Dept. V
1000 Crystal Drive, Fort Myers, Florida Phone WE 6-2100

FOR SHIPMENT VIA FIRST CLASS MAIL AT NO EXTRA COST ATTACH THIS ADVT. TO YOUR ORDER!

VHF Showcase

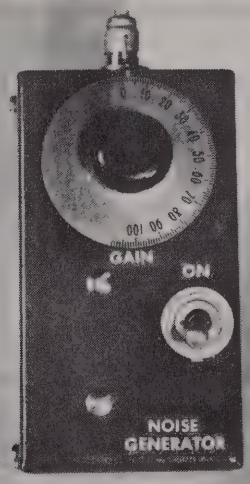

NOISE GENERATOR

With all the emphasis on the use of noise generators, it was a leadpipe cinch that sooner or later someone would come out with one at a reasonable price. Who done it? *Quaker Electronics,* of Mountain Top, Pa., (the crystal people), that's who.

This is a tiny, self-contained unit very similar to the one described in the latest issue of the ARRL Handbook, built around a silicon diode, a battery, and a rheostat. While it will not give you a definite "noise figure" for your receiver, it *will* help you get the best noise figure out of your equipment.

Price of the unit, Quaker advises, is $7.95 postpaid in the U.S.A. For further details, drop them a line and tell them we sent you.

6-METER CONVERTER

A good, low-noise, anti-clobber converter for 50 Mc is always welcome on the market. The latest announcement of such a unit comes from *Amplidyne Laboratories,* 123 Fifth Avenue, Kings Park, N.Y.

Their model C61, available from stock now at a price of $28.50, sports the following specifications: Input, 50 Mc. Output, 14 Mc (other *if's* available at $1 extra charge). Noise figure, 3.5 db maximum (2.5 db typical). Gain, 25 to 40 db, adjustable to receiver needs. Input and output impedances, 50 ohms.

Three tubes are used: a 6CW4 g-g *rf* amp., a 6BK7 mixer-oscillator, and a 6C4 *if* amplifier.

A matching power supply is available for $9.75, and the maker advises that similar units for 144, 220, and 432 are on the way. For additional details, write him and say Ichabod sent you.

SENSITIVE LOW-COST TV CAMERA

A new type of TV camera, inexpensive enough for amateur service yet sensitive enough to compete with Vidicons, has been announced by the *Denson Electronics Corporation,* Longview Street, Rockville, Conn.

Designated the "Al-Dee," the unit sells for $239.95 complete with lens, F.O.B. Rockville.

Included in this package is a complete TV transmitter. Camera tube is a two-inch electrostatic vidicon of improved design; the lens is a 48mm f/1.9 in standard Leica mount. Output is on any TV channel from 2 to 6 (low-band), at 0.1 volts. Full audio, to be fed by crystal, ceramic, or dynamic mike, is also included.

For complete details and specifications, drop a line to Alfred C. Denson, president of the corporation. He'll be glad to send you the full data.

UPX-4 . . . from page 24

is a size I happened to have handy and no doubt other sizes would work. This will cover about half of each air hole at the top so these holes should be bored out again so plenty of air will go through. Two notches were cut in the sides for the HV connection to come out and for air to go through. The sketch shows more detail.

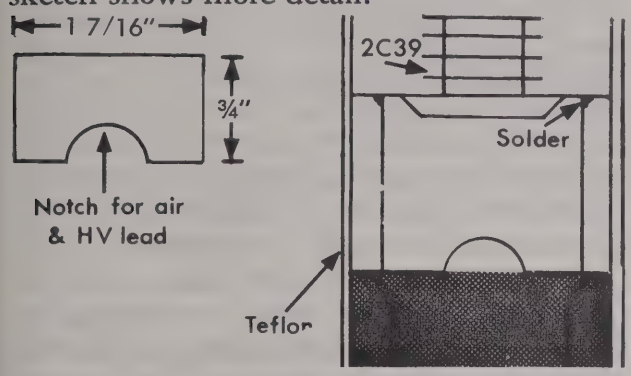

In my case, the dielectric slug and the pipe just about touch when tuned to 1296. You can judge the length of the slice of pipe by this. Make them long enough to almost touch; it doesn't hurt if they *do* touch because the slug is insulated.

FINAL STAGE CAVITY

Get a piece of 4-inch-plus OD copper pipe and cut off a slice a little less than 3/4 inch long. You can measure the depth of the final plate cavity for the correct width of this slice. This pipe should be the right size to fit tightly in the cavity; I didn't have any, so I made one out of a piece of silver-plated flat brass. I bent it into a tight-fitting circle and soldered the seam. Bore 3/8 inch holes in this slice of pipe to match the air holes inside the cavity. Cut the side out of one hole so the pipe will slide in without disconnecting the output link. I soldered this pipe in but could tell no difference from the unsoldered condition. The sketch shows what it looks like.

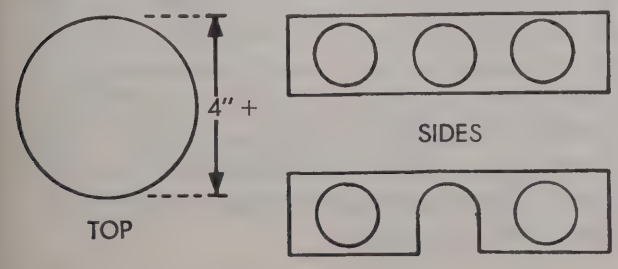

There are probably better ways of doing this, but it works. If you make some improvements as you go along let me know.

(P.S. This was originally sent to W5AJG/AF5AJG and later duplicated for use by AF MARS members. That's why the last line, about "improvements." But it still applies. Let us know if you make improvements on this conversion!)

69-cent . . . from page 15

4) It should have low dielectric loss, especially for use above 100 Mc.

Requirements 1 and 2 dictate a transparent substance, since if radiant heat is neither absorbed nor reflected, it must by necessity pass through! The use of glass is thereby indicated.

Since some heat is bound to be absorbed, the use of a temperature-resistant glass such as Pyrex is suggested to fulfill requirement 3. Requirement 4 is fairly well met by Pyrex glass also.

The remaining problem, then, is price and availability of Pyrex glass of the proper size and shape to do the job. Fortunately, chimneys are available at many supermarkets for only 69 cents.

They are sold under the guise of a replacement part for Pyrex coffee percolators The six-cup model fits the 4-125A nicely, while the eight-cup model is ideal for the 4-250A and 4-400 type tubes!

Since using these inexpensive yet effective chimneys, I no longer "suck in" my 4-125A's when running a full KW on 144 Mc AM phone. The addition of the two Pyrex chimneys was the only change made, the subchassis blower system being the same as always.

—W6MMU

airmail YOUR report
D. R. P.

VHF Lab Reports

Having had considerable experience in the past with Hornet beams and being definitely impressed with the excellent construction of same, in regards to the low frequency versions, imagine the surprise at finding a new line of Hornet antennas for the VHF realm. A quick call to Jack Guest at the Hornet Antenna Products Company verified our findings and a further word of encouragement from Jack prompted us into ordering a complete 40 element 2 meter array.

What Jack had to say about new arrays was enough to convince anyone of their obvious merits. Since Oklahoma is blessed, unhappily so, with some pretty strong spring winds and winter ice (heavily guyed towers fold up down here every year from the effects of the elements) one of the most logical questions we could ask was, "Will they stay up in the Oklahoma weather?" Well, Jack's answer was, "I've got some down here that have already been in 70 plus mph winds and are still standing." Wanting to know more, we asked, "Does this imply that the arrays are constructed of bridge steel?" Jack's answer was a good one but more important, he explained all the mechanics of the new beams which we found all very interesting.

First of all, the new arrays are available in either regular or heavy duty versions and in 5 and 10 element configurations. (We chose the 5 element heavy-duty which was rigid, high strength, 3/16", solid aircraft aluminum elements.) In manufacturing the heavy-duty versions, each element is given a formed, all-weather, plastic extrusion that is shaped in a form which just fits the curvature of the boom. This method really has its advantages especially so since the element is insulated from the boom and eliminates all the electrolysis problems.

The driven element is the most interesting part of the whole beam. It is a "J" matched dipole that is really rugged. The side that is folded back towards the boom has an aluminum sleeve of somewhat different diameter than the driven element itself. The size of this sleeve determines the resultant feed impedance. This makes stacking these arrays quite easy since there is a means by which the feed impedance may be modified. Also, the sleeve is fastened to the smaller part of the element with two Allen Head screws for mechanical strength and good electrical contact. Attaching the feed line is quick and simple with the aid of a husky terminal block that is firmly attached to the boom.

That pretty well describes what we consider as a first-class antenna. But when we saw the 40 element array that Hornet built for us, not enough could be said to express the sheer delight that was experienced. The end result was an array of 8 - 5 element yagis stacked four high by two bays wide. All the matching harness was made of polyfoam coax and was already strapped down to the stacking bars with aluminum Wrap-lock. On top of this, the fittings all had "shrink tubing" over them for complete weather protection. Even the ends of the stacking bars were capped. Since we had requested that the horizontal crossbars be a certain diameter (1-3/8") so a tilt system could be installed, we were a little worried about the strength of this member. Well, the worries ceased upon examination. The crossbar did meet the diameter criteria but to make sure it was strong enough, the Hornet people had put an additional piece of tubing inside and had fastened large sleeves over the outside toward the upright stacking bars. If by now you are thinking that the array is a little heavy, forget about it. Total weight is under 50 pounds. Does it work? Unbelievably so and has already done considerable service at the W5HCX QTH. Truly, the new Hornet arrays are "The beam with a sting."

Noise . . . from page 18

shown, for initial phase selection and also for future demonstration purposes.

When tuning, the noise must be re-nulled with each signal, since signals of different strengths will produce different levels of quieting and will thus require different levels of noise from the cancellation channels.

This balancing procedure might be re-that the signal level would automatically fined by use of a crossover AVC system so determine the gain in *both* receivers. This is an area for future experimenting.

With two average, unmodified receivers the improvement may be up to 6 db. With identical receivers in each channel the improvement theoretically may be much more. Up to 100 percent elimination of man-made noise is possible.

Editor's note: Note carefully that this system does *not* reduce random noise or hiss such as that generated in first-stage RF amplifiers. Such noise has no phase coherence over any bandwidth at all, and so cannot be phased out by cancellation. However, K5-MBV does appear to have hit upon a perfect way to get rid of power leaks and the like. Let us know if you try it.

2 ANTENNAS IN 1

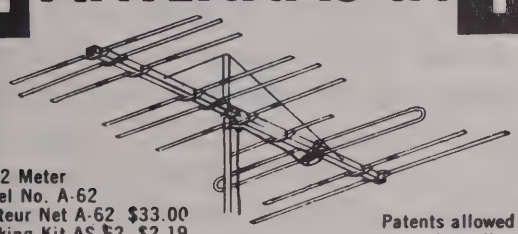

6 & 2 Meter
Model No. A-62
Amateur Net A-62 $33.00
Stacking Kit AS-62 $2.19

Patents allowed and pending

The Only Single Feed Line
6 and 2 METER
COMBINATION YAGI ANTENNA
another first from **FINCO®**

ON 2 METERS
18 Elements
1 — Folded Dipole Plus Special Phasing Stub
1 — 3 Element Colinear Reflector
4 — 3 Element Colinear Directors

ON 6 METERS
Full 4 Elements
1 — Folded Dipole
1 — Reflector
2 — Directors

See your FINCO Distributor or write for Catalog 20-226
THE FINNEY COMPANY
Dept. V Bedford, Ohio

HUGHES

COMMUNICATIONS DIVISION
in
SOUTHERN CALIFORNIA

has immediate growth assignments for qualified engineers on long-term development work in the following project areas:

- **Super-Power Laser Equipment**
- **High-Power Sub-Miniature Airborne UHF Power Amplifiers**
- **Folded Linear Line High-Power NHF Amplifiers**
- **Klystron Power Amplifiers**
- **TWT Amplifiers**

Recent experience in one or more of the following areas is required:

- **AMPLIFIERS (HIGH-POWER, COAXIAL, LINEAR LINE).**
- **HIGH-POWER RF FILTER DESIGN**
- **RF PACKAGING**
- **MIL SPEC Packaging**
- **VERY HIGH OUTPUT POWER SUPPLIES**
- **SOPHISTICATED CONTROL CIRCUITRY**

An E.E. degree is preferred and U.S. Citizenship is required.

For immediate consideration, please airmail confidential resumé to:

Mr. Don Horton
Employment Manager

HUGHES
HUGHES AIRCRAFT COMPANY

COMMUNICATIONS DIVISION
P. O. Box 90902, Airport Sta.
Los Angeles 9, Calif.
An equal opportunity employer

Scanning the literature

CURRENT MAGAZINES

Three Tubes on Three-Quarter Meters, Fred Brown, W6HPH. CQ, December, 1962, page 48.

About the only state-of-the-art material published during the month of December is this 2½-page description of a mighty midget for 432. Fred is quite an experimenter — some of you may recall his two-tube (plus diode-multiplier) two-meter rig described earlier in the year, also in CQ.

The latest venture is basically that two-tuber for two, with another diode multiplier and a final tube added for 432. All three tubes are 6AK5's; nobody is going to set any power records with this rig but it *does* deliver a quarter watt of output and has received good signal reports at distances up to 100 miles. Part of this is Fred's QTH (ye Ed once worked him with a Two'er at 120 miles!) which is some 6,000 feet up the side of Mt. San Jacinto — but a lot of it is in the rig.

Recommendation: Must reading, especially for those who think 432 Mc requires lots of fancy tubes and expensive metalwork!

In the same CQ:

Packaged Power for Six, W2LCB. How to build a 50-watt 50 Mc transmitter with a 6146. Main feature is the packaging and broad-band setup which eliminates most tuning controls. 6½ pages.

Medium Power on 6 — Economically, WA2NDM. Four-tube, 120-watt, 50-Mc transmitter including VFO. No stability figures given 2⅔ pages.

Eliminate Overload, K3HNP. Construction details on a 6-meter tunable cavity and preamp to clobber clobbering. 2 pages.

APX-6 Radiators, K2UYH. How to build an antenna for 1296 Mc. ½ page.

VHF Balun, WA2NDM. How to make a balum out of TV "elevator coils." ½ page.

In the December QST:

A Low-Noise Preamplifier for 432 Mc., W4TVP. Complete construction details for a 416B preamp for this band. Excellent if you have a 416B. 3½ pages.

A Compact Six-Meter Transmitter, K2IUV. 100 watts for 50 Mc using an 829B. Size of rig is 3 inches high by 5 inches deep by 12 inches long. Gad! 4½ pages.

September VHF Party Summary. Compare your score with the rest of the country. 5 pages.

PREVERTER 50 & 144

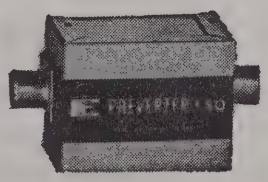

THE BEST PREAMPLIFIERS AVAILABLE AT ANY PRICE — TRANSISTORIZED — 12 volt. NO NEED FOR EXPENSIVE HIGH VOLTAGE SUPPLIES — LOW NOISE FIGURE—

6 or 12 Meter model. . .$14.95 post paid.

In the December 73:

A Stable, Two Meter VFO, W6TKA. One-tube remote-tuned unit with 6-Mc output for ARC-4. Easy to modify for other outputs. Looks good. 2½ pages.

Modifying the Sixer, K4ZQQ. How to boost the power output by 50 percent at the cost of three resistors, a capacitor, and a tube. ½ page.

Modifying the Lafayette HE-45 WA2-INM. Not much to change, but Larry found it. Looks good if you have an HE-45. 1 page.

73 *Tests the Irving Hiverter* 50, Staff. They like it. 1 page.

432 *Mc Antenna Tuner,* W1TQZ. Pictorial of a much-needed item now that power is OK. ½ page.

Coaxial Baluns, WA2INM. How to build them. 1 page.

NEW BOOKS

The Radio Handbook, Sixteenth Edition. Edited by William I. Orr, W6SAI. Published by Editors and Engineers, Limited, Summerland, Calif.

This new, brown-covered edition of the old standby of most homebrew addicts has been around for a month or more but we just got hold of a copy to look at.

Frankly, as VHF'ers we were a bit disappointed. The 15th edition (yellow cover) was crammed full of 6-meter equipment, and with the move to ever-higher frequencies we felt sure this new edition would have the same sort of goodies for 144, 220, 432, etc. It doesn't.

There are a couple of goodies, yes, and the book is well worth its (increased from 15*th* edition) price. But we wish there had been more about UHF.

Most interesting, in our opinion, was the data on strip-line amplifiers for 144 and 220. Though they're included under "Low-Power Transmitters and Exciters" (the only other VHF gear in the chapter is a 6-meter transistorized fone rig), they use 4 x 250's. Guess anything under 2 KW is

(Turn to page 40)

CLASSIFIED

Commercial classified advertising space is available at 25 cents per word, per month. Minimum number of words per advertisement, 10. Classified advertising submitted by individual hams which in the opinion of VHF Horizons is non-commercial in nature, 10 cents per word, no minimum. Full remittance must accompany all orders; closing date for each issue is the 5th of the preceding month. Copy must reach Oklahoma City by that time.

SELL — Two meter Communicator III, $190.00, SX-110, $139.00. Both very clean. K0WOB.

SELL — Wilcox 2M KW RF Unit. Exciter, 5763's, 829B, Pair 4-125A's, overload, underload relays, bias isolation and protection, all tubes, filament transformers; also have commercial modulator for above with 813's; also heavy duty plate transformers, chokes, etc. Make offer, all or part. Also AF-67, $50.00. W4OAB, 4117 Murrayhill, Charlotte, N.C.

TUBES WANTED — all types, highest $ paid. Lou-Tronics, Inc., 131 Lawrence Street, Brooklyn 1, New York.

TUBES - 829B's — $5. pair COD. .W6WGJ, Milt Levy, 1342 Tremaine Avenue, Los Angeles, California.

WANT SOME 220 GEAR — What have you? Want good quality low noise converter and 25-50 watt plate modulated driver rig with power supply. Have the following to offer in trade. Centimeg 432 converter, brand new with 7-11 i.f., Collins MP-1 mobile power supply for KWM-2, brand new in sealed plastic bag. 38 element Telrex Spiralray yagi for 144. Deluxe voice operated Business Radio Phone Patch ($70.00), brand new. And (as a last resort) money. Write W5KHT in care of VHF Horizons.

BUY OF A LIFETIME FOR VHF HOMEBREWERS — Brand new surplus capacitors (500 pF) almost identical to Sprague BH-140's (new cost 42 cents each) specified in VHFH articles. Only $1.00 for 10, postpaid. Only have 30 such packets. Cash or money order only, please. K5QGO, 1236 N.E. 44, Oklahoma City, Okla.

FREE SAMPLES & CATOLOG QSL cards. $2.50 per 100 in 3 colors. Garth Printing Company, Box 51V, Jutland, N.J.

CHANCE FOR TALENTED WRITERS — A certain well-known publishing Company in the communications field will be hiring one or more journalism trained electronic bugs with a flair for promotion, copy writing and editing. Salary s small, prestige is big. Get on file now. Send your particulars to Box C-1, VHF Horizons.

220 MC INFORMATION PLEASE — Call, frequency, equipment, schedules. Postage returned. 73, W9DJ.

D. R. P.

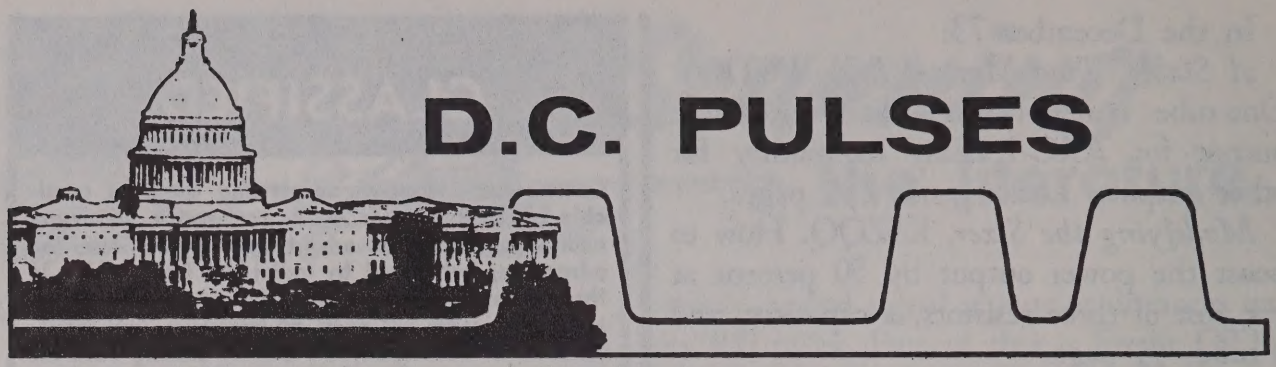

D.C. PULSES

Petitions for rule-making continued to dominate the ham scene in Washington during the normally quiet Holiday season. The two petitions filed both appeared to be of extreme interest to VHF-UHF operators.

Earliest was RM-389 (FCC file number), from Martin K. Barrack, WA2ZKR, of The Bronx, N.Y. His petition requested amendment of present ham rules so as to (1) remove present Novice privileges on two meters, replacing them with a CW assignment from 147.9 to 148 Mc; (2) take away all Technician privileges below 420 Mc; and (3) replace the present method of testing candidates for Technician class licenses with one providing for Extra Class theory and 5 wpm code requirement, to be taken before FCC examiners only.

No indication of any planned immediate action was available from FCC sources. Within the last several months, other petitions aimed at reducing privileges for specific classes of licensees have been rejected with statement that Commission policy is *against* "rollback" of privileges for any class of license.

The other petition was filed in early January by the Institute of Amateur Radio, Peterborough, N.H. It asks amendment of present rules to permit amateur television transmission in the frequency bands 52-54 and 145-9-147.9 Mc. Present rules prohibit TV transmission by hams below 420 Mc.

The IAR petition proposed that the rule amendment include the requirement for restricted-bandpass modulation techniques "subject to the conditions that the bandwidth of emissions shall not exceed a total of one Mc, and that the purity and stability of such emissions shall be maintained in accordance with the requirements of section 12.133."

The petition cited results of "numerous tests conducted by a variety of amateurs" which it said indicate that a standard 262½ line ATV picture can be reduced to as low as 100 lines and still yield an "adequate" picture. With 60-frame-per-second scanning speeds, such a signal would require only 400 Kc of spectrum space

Scanning . . . from page 39

considered "low" power out west, hi!

In the "Receivers and Transceivers" chapter a couple of projects caught our eyes. One was an inexpensive receiver for HF only, with a 3-Kc bandwidth. Looks like a natural for a do-it-yourself *if* tuner. The other was a "Siamese" Nuvistor converter for 6 and 2, using one chassis and power supply.

In the chapter on VHF and UHF antennas, almost no changes were made from the previous edition. The only change we found was the addition of a 13-element 2-meter Yagi (from the Orr and Johnson VHF Handbook).

Theory chapters, of course, remain almost unchanged from edition to edition. After all, the *theory* of radio hasn't been re-written lately.

Conclusion: Must for the library of any serious homebrewer. If you have the 15th, con a buddy into buying this one and share them. Otherwise, buy it yourself.

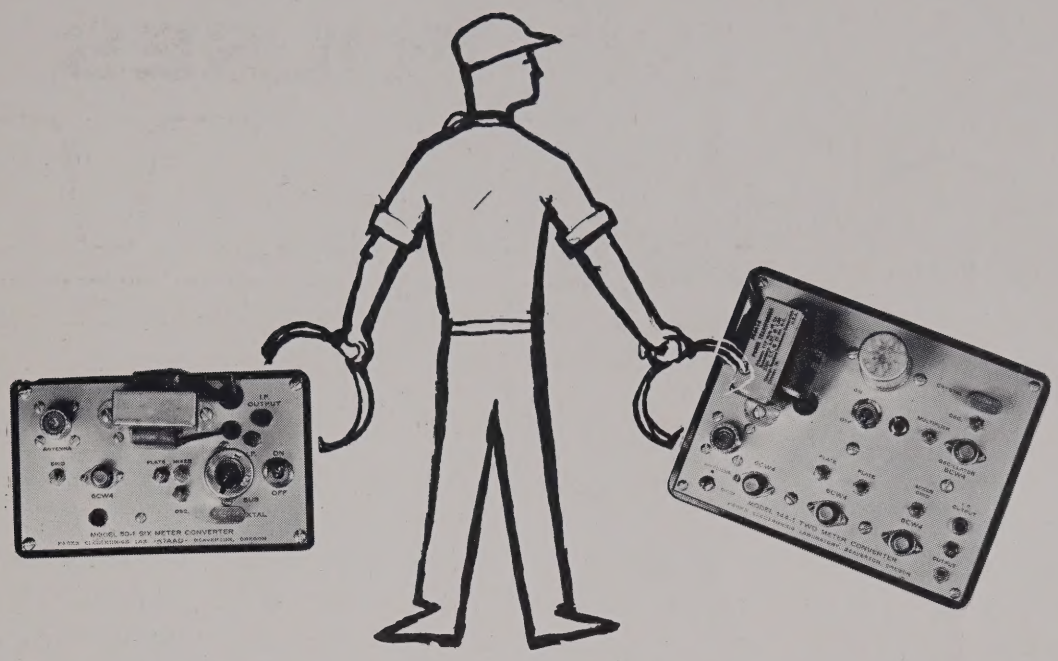

PICK A PAIR-FROM PARKS!

Pick the VHF converter pair that stands the true test of comparison. The 50-1 for six meters and the 144-1 for two meters. Exceedingly low noise state-of-the-art Nuvistor converters precision engineered from Parks Electronics Labs.

On Six—The 50-1 low noise (2.5 db or better) virtually over-load proof pride of the band! Cross mod? Overload? Not with the 50-1! Self contained power supply, select your i.f. output from several available. 6CW4 neutralized triode front end, 6U8A pentode mixer - oscillator. Adequate gain for even the grueling requirements of scatter. Stable, complete and ready to go (just plug it in!) for **$34.50 each!**

On Two—The 144-1 low noise (3.0 db or better) over-load proof two meter DX converter. Dig way down into the noise, stay up with the 417A boys and still have no overload or cross mod. Self contained power supply. 4 6CW4 Nuvistors. Exceptional stability, flat 4 megacycle response. Four tuned circuits at 144 megacycles for maximum rejection of out-of-band signals, best noise figures. A wide choice of i.f.'s. Just **$54.95 each**

All Parks precision VHF converters carry a six months guarantee on workmanship and materials (tubes excepted). I.f. ranges available for either 50-1 or 144-1 include 7-11, 14-18 and 30.5 -34.5 megacycles, and additionally for two meter units 26-30 and 27-31 megacycles. All prices postpaid to your door. Also available NOW. Two meter Nuvistor pre-amplifiers employing the same high quality workmanship found in Parks converters. Two meter pre-amps (with power supplies) only *$28.00 each*. Code wheels — for DX, contest or scatter work. "CQ CQ de . . ." with your call sign at approximately 10 wpm. Three output - inputs for instantaneous take-over with hand key or bug. Only *$25.00 each*. Allow ten days for code wheel

ORDER TODAY . . . DIRECT FROM:

PARKS ELECTRONICS LABORATORIES

ROUTE 2, BOX 35 — BEAVERTON, OREGON

VHF HORIZONS
P. O. BOX 1557
OKLAHOMA CITY, OKLAHOMA

BULK RATE
U. S. POSTAGE
PAID
Permit No. 7
Okla. City, Okla.